1. Approving National Authority/Country	Authorized Release Certificate	3. Form Tracking Number
Transport Canada	FORM ONE	SO110449

4. Approved Organization Name and Address		5. Work Order/Contract/Invoice
Eagle Copters Maintenance Ltd. 823 McTavish Road NE, Calgary, Alberta, Canada, T2E 7G9	TCCA AMO Number 6-81 EASA Part-145.7028 Chilean Approval Number 333	WO49952

6. Item	7. Description	8. Part Number	9. Quantity	10. Serial Number/ Lot Number	11. Status/Work
1	Heli-Utility Basket, RH	D350-607-042	1	B24964	Insp. / Tested

12. Remarks

Basket P/N 350-607-042 inspected according to Dart approved drawings and was trial fitted on AS350 Landing Gear. All inspections and test were carried out and found the part conformed to the previous information supplied by customer.

This part has been determined to conform to the approved type design or to be acceptable under section 571.13 of the CARS

Time Since New: U/K Time Since Overhaul: U/K Other: NIL

~~13a. Certifies that the items identified above were manufactured in conformity to:~~

~~Approved Design data and are in condition for safe operation~~

~~Non approved design data specified in block 13~~

14a.

☒ CAR 571.10 Maintenance Release

☐ Other regulations specified in block 12

Certifies that, unless otherwise specified in block 12, the work identified in block 11 and described in block 12 has been performed in compliance with the Canadian Aviation Regulations

~~13b. Authorized Signature~~	~~13c. Certificate/Approval Number~~	14b. Authorized Signature:	14c. Certificate/Approval Number:
			TC AMO Approval No. 6-81
~~13d. Name~~	~~13e. Date~~	14d. Name: Patrick Smith	14e. Date (mm/dd/yyyy) 01/31/2013

Installer Responsibilities

This certificate does not constitute authority to install. Installers working in accordance with the national regulations of a country other than that specified in block 1 must ensure that their regulations recognize certifications from the country specified. Statements in blocks 13a and 14a do not constitute installation certification. In all cases, the technical record for the aircraft must contain an installation certification issued in accordance with the applicable national regulations before the aircraft may be flown.

1. Approving National Authority/Country	Authorized Release Certificate FORM ONE	3. Form Tracking Number
Transport Canada		**SO110449**

4. Approved Organization Name and Address		5. Work Order/Contract/Invoice
Eagle Copters Maintenance Ltd. **823 McTavish Road NE,** **Calgary, Alberta, Canada, T2E 7G9**	**TCCA AMO Number 6-81** **EASA Part-145.7028** **Chilean Approval Number 333**	**WO49952**

6. Item	7. Description	8. Part Number	9. Quantity	10. Serial Number/ Lot Number	11. Status/Work
1	**Heli-Utility Basket, RH**	**D350-607-042**	**1**	**S/N10363** **WO24964**	**Insp. / Tested**

12. Remarks

Basket P/N D350-607-042 inspected according to Dart approved drawings and was trial fitted on AS350 Landing Gear. All inspections and test were carried out and found the part conformed to the previous information supplied by the customer.

This part has been determined to conform to the approved type design or to be acceptable under section 571.13 of the CARS

Time Since New: **U/K** Time Since Overhaul: **U/K** Other: **NIL**

~~13a. Certifies that the items identified above were manufactured in conformity to:~~ ~~Approved Design data and are in condition for safe operation~~ ~~Non approved design data specified in block 13~~		14a. ☒ CAR 571.10 Maintenance Release ☐ Other regulations specified in block 12 Certifies that, unless otherwise specified in block 12, the work identified in block 11 and described in block 12 has been performed in compliance with the Canadian Aviation Regulations	
~~13b. Authorized Signature~~	~~13c. Certificate/Approval Number~~	14b. Authorized Signature:	14c. Certificate/Approval Number: **TC AMO Approval No. 6-81**
~~13d. Name~~	~~13e. Date~~	14d. Name:	14e. Date (mm/dd/yyyy)

Installer Responsibilities

This certificate does not constitute authority to install. Installers working in accordance with the national regulations of a country other than that specified in block 1 must ensure that their regulations recognize certifications from the country specified. Statements in blocks 13a and 14a do not constitute installation certification. In all cases, the technical record for the aircraft must contain an installation certification issued in accordance with the applicable national regulations before the aircraft may be flown.

1. Approving National Authority/Country	Authorized Release Certificate FORM ONE	3. Form Tracking Number
Transport Canada		**SO110449**

4. Approved Organization Name and Address		5. Work Order/Contract/Invoice
Eagle Copters Maintenance Ltd. **823 McTavish Road NE,** **Calgary, Alberta, Canada, T2E 7G9**	**TCCA AMO Number 6-81** **EASA Part-145.7028** **Chilean Approval Number 333**	**WO49952**

6. Item	7. Description	8. Part Number	9. Quantity	10. Serial Number/ Lot Number	11. Status/Work
1	**Heli-Utility Basket, RH**	**D350-607-042**	**1**	**S/N10363/ WO24964**	**Insp. / Tested**

12. Remarks

Replacement certificate / missing information, original certificate issued on January 31, 2013:
Basket P/N350-607-042 inspected according to Dart approved drawings and was trial fitted on AS350 Landing Gear. Inspections and test were carried out and found the part to conform with previous information supplied by customer

This part has been determined to conform to the approved type design or to be acceptable under section 571.13 of the CARS

Time Since New: **U/K** Time Since Overhaul: **U/K** Other: **NIL**

~~13a. Certifies that the items identified above were manufactured in conformity to:~~

~~Approved Design data and are in condition for safe operation~~

~~Non approved design data specified in block 13~~

14a.

☒ CAR 571.10 Maintenance Release

☐ Other regulations specified in block 12

Certifies that, unless otherwise specified in block 12, the work identified in block 11 and described in block 12 has been performed in compliance with the Canadian Aviation Regulations

~~13b. Authorized Signature~~	~~13c. Certificate/Approval Number~~	14b. Authorized Signature:	14c. Certificate/Approval Number:
			TC AMO Approval No. 6-81
~~13d. Name~~	~~13e. Date~~	14d. Name: **Patrick Smith**	14e. Date (mm/dd/yyyy) **02/05/2013**

Installer Responsibilities

This certificate does not constitute authority to install. Installers working in accordance with the national regulations of a country other than that specified in block 1 must ensure that their regulations recognize certifications from the country specified. Statements in blocks 13a and 14a do not constitute installation certification. In all cases, the technical record for the aircraft must contain an installation certification issued in accordance with the applicable national regulations before the aircraft may be flown.

DART

TEL: 1 013 612-3130
FAX: 1 013 612-4413

P/N	D350-507-042	CHG	CHG002
	Hoist-Utility-Basket	DIC	SH94-14
S/N	B10363	DIC	SRC0213NY
EQUIP	AS350/355	EV	

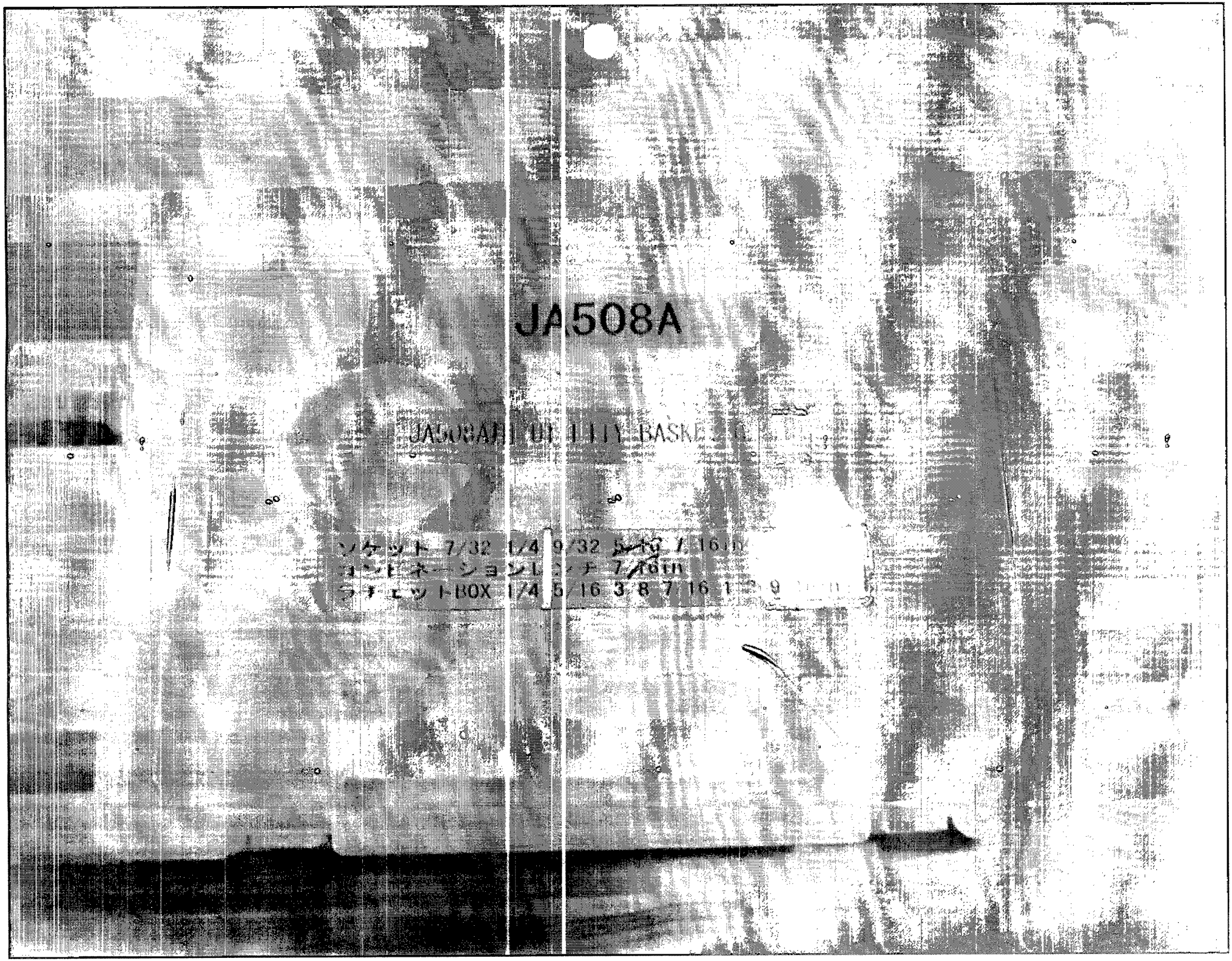
JA508A
JA508AH UTILITY BASKET
ソケット 7/32 1/4 9/32 5/16 7/16 1/2
コンビネーションレンチ 7/16in
ラチェットBOX 1/4 5/16 3/8 7/16 1/2 9

UP
UP

MAXIMUM DISTRIBUTED LOAD
200 lb / 91 kg
JA508A
DART

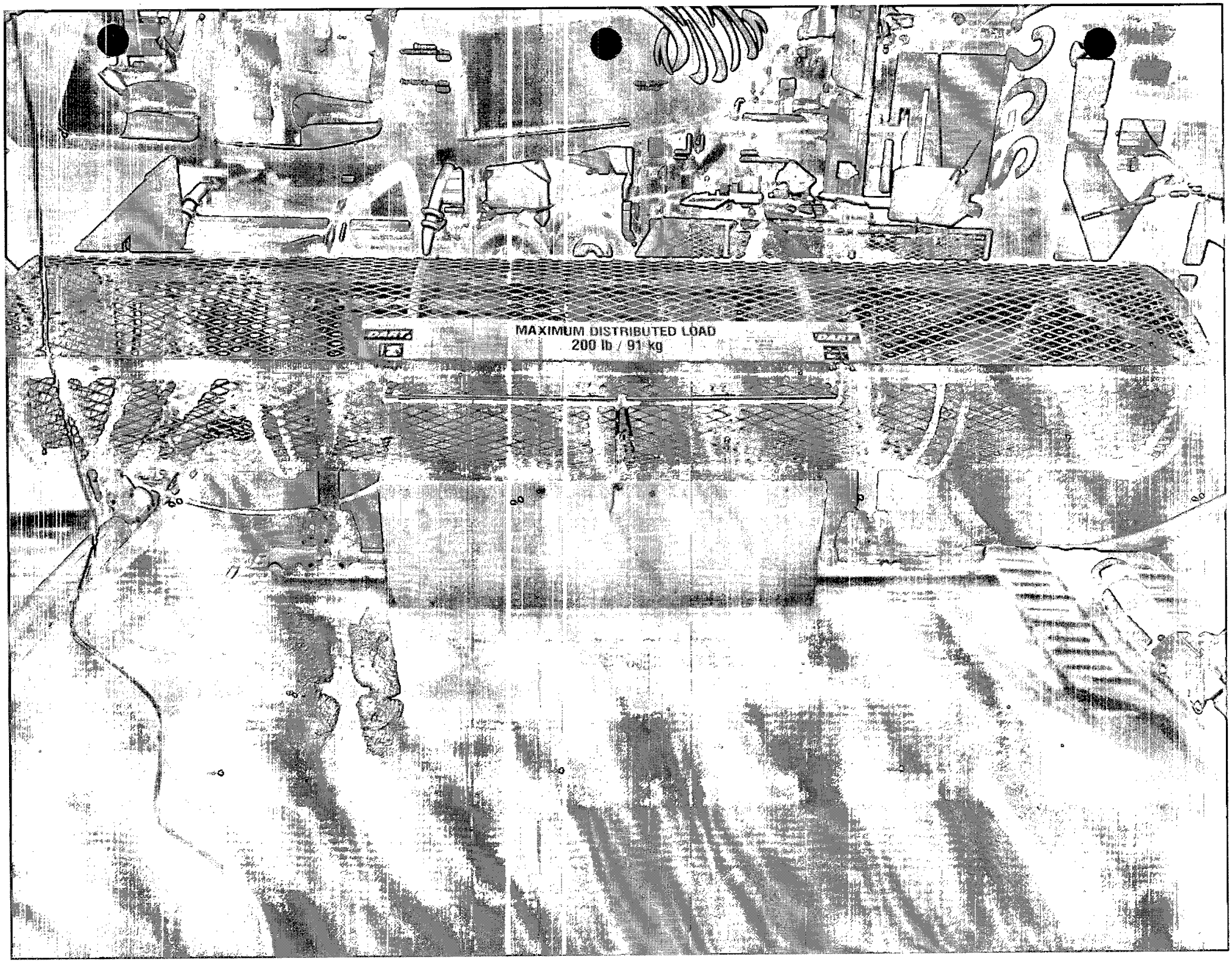
MAXIMUM DISTRIBUTED LOAD
200 lb / 91 kg

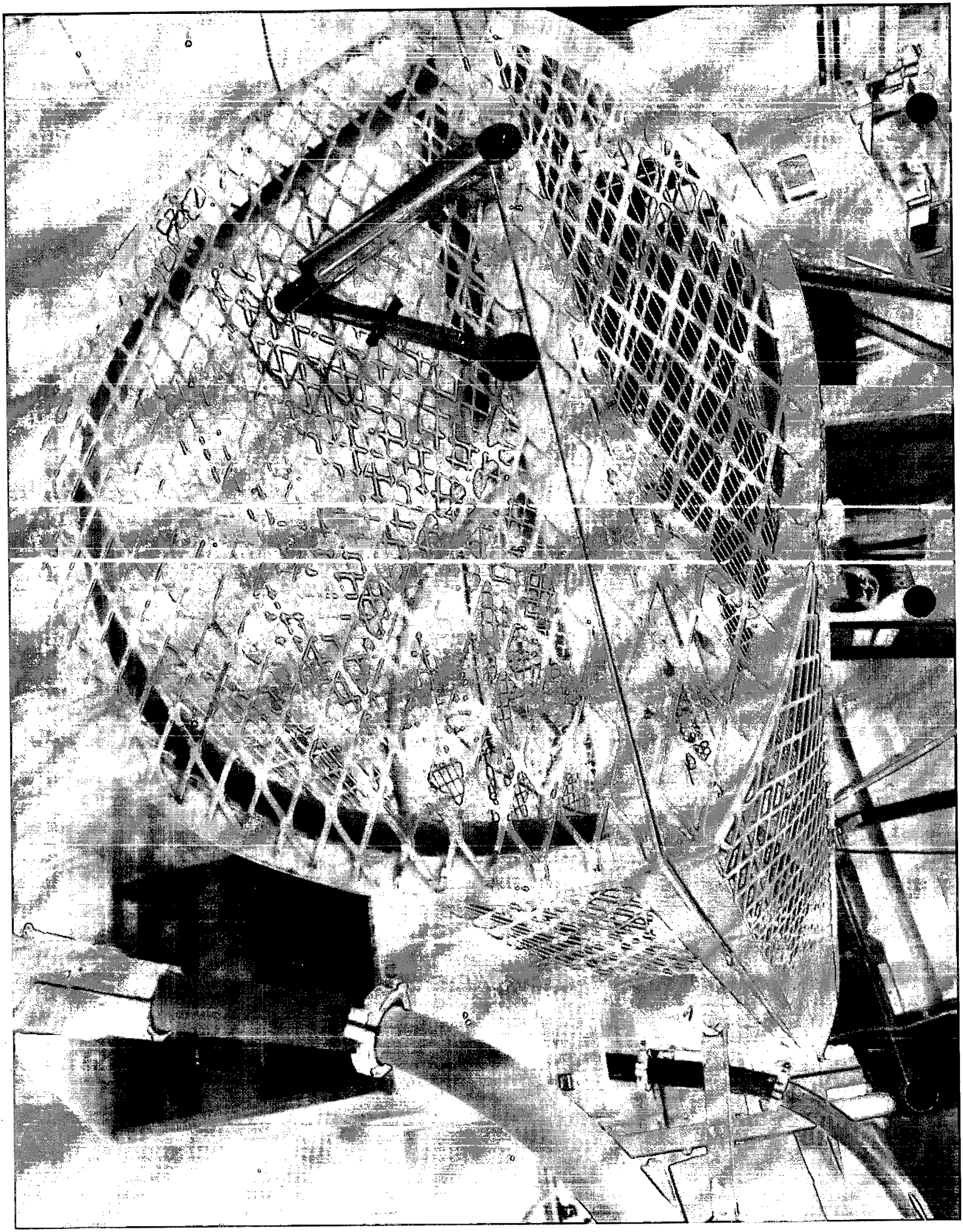

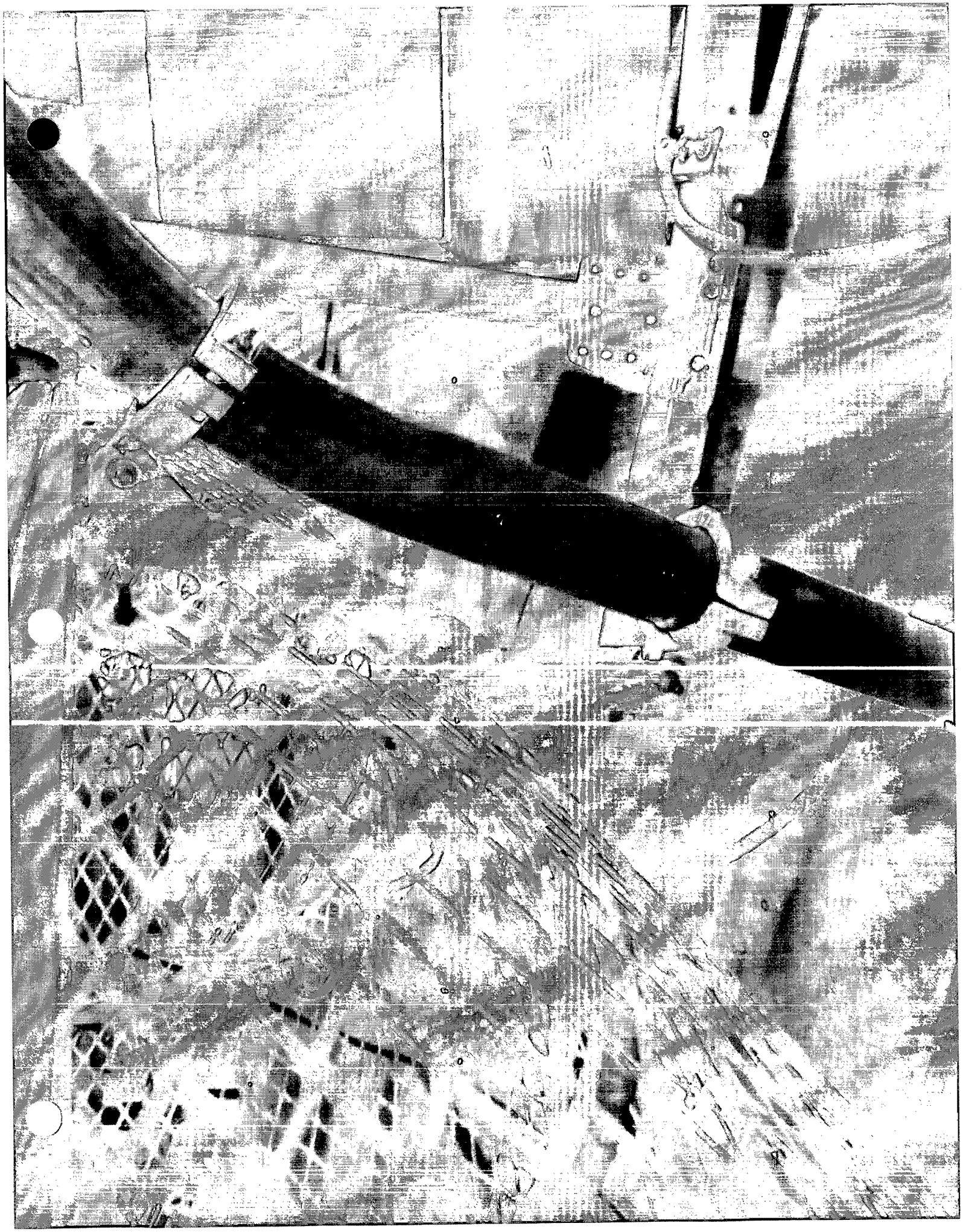

DESIGN	DRAWN BY	DART AEROSPACE LTD HAWKESBURY, ONTARIO, CANADA
BW	PH	
CHECKED	APPROVED	DRAWING NO. REV. F
		D2221 SHEET 1 OF 3
DATE		TITLE SCALE
05.06.07		BASKET BASE ASSEMBLY (350) NTS

C	95.11.21	SEPARATE BASKET AND LID
D	96.06.21	CHANGE LATCH
E	01.04.19	CHANGE HINGE
F	05.06.07	ADD SHIM UNDER HINGES, ADD HOLES FOR SPLIT LID BASKETS

RELEASED
05.08.19

PARTS LIST FOR D2221 BASKET BASE ASSEMBLY

PART NO	QUANTITY	LENGTH A	LENGTH B	DESCRIPTION
D2221-1	2	——	96.00	RIB
D2221-3	2	——	25.50	RIB
D2221-5	2	18.88	——	RIB
D2221-7	1	55.25	——	RIB
D2232-3	2	N/A	N/A	HINGE PLATE
D2235-1	4	N/A	N/A	RIB
D2325	4	N/A	N/A	SUPPORT GUSSET
D2327-3	2	N/A	N/A	BUSHING
D2581	2	N/A	N/A	MTG BRKT
D3442-1	2	N/A	N/A	SHIM

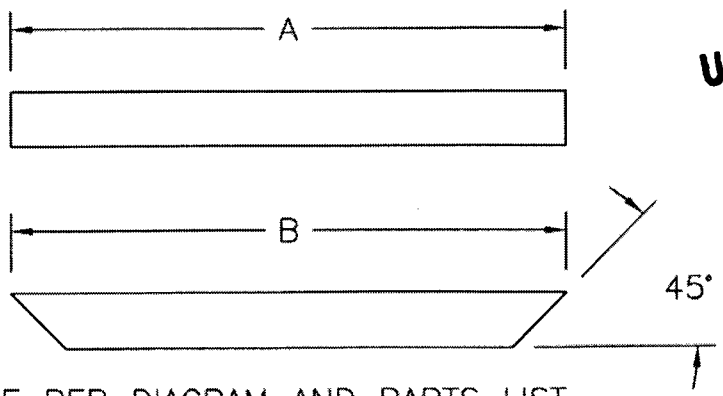

UNDER REVIEW
08.04.05
TUBING TO BE CHANGED TO 0.065 WALL

D2221-1/-3/-5/-7

1) CUT LENGTH/SHAPE PER DIAGRAM AND PARTS LIST
2) MATERIAL: AISI 304/316 SS, 3/4 X 3/4 X 0.060 WALL SQUARE TUBING (REF. DART SPEC M304TS0.750W.060)
3) TOLERANCES ARE PER DART QSI 018 UNLESS OTHERWISE NOTED
4) ALL DIMENSIONS ARE IN INCHES
5) DRILL ø0.257 HOLES ONLY WHEN ASSEMBLING D2221 BASE WITH D2989-041/-043 BASKET LID

Copyright © 1994 by DART AEROSPACE LTD
THIS DOCUMENT IS PRIVATE AND CONFIDENTIAL AND IS SUPPLIED ON THE EXPRESS CONDITION THAT IT IS NOT TO BE USED FOR ANY PURPOSE OR COPIED OR COMMUNICATED TO ANY OTHER PERSON WITHOUT WRITTEN PERMISSION FROM DART AEROSPACE LTD.

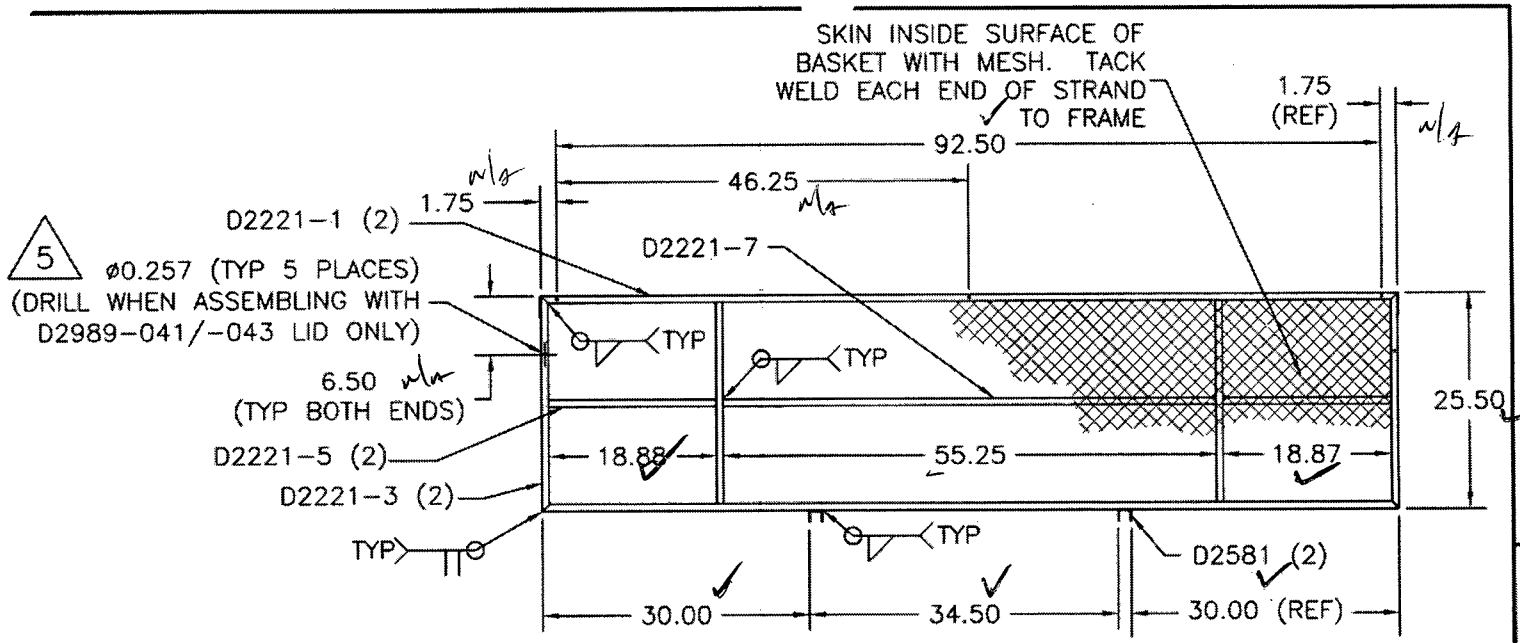

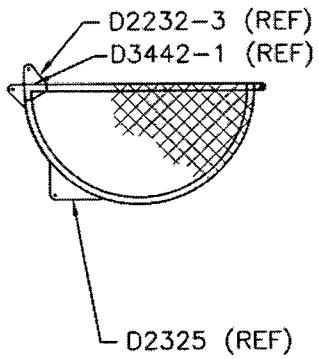

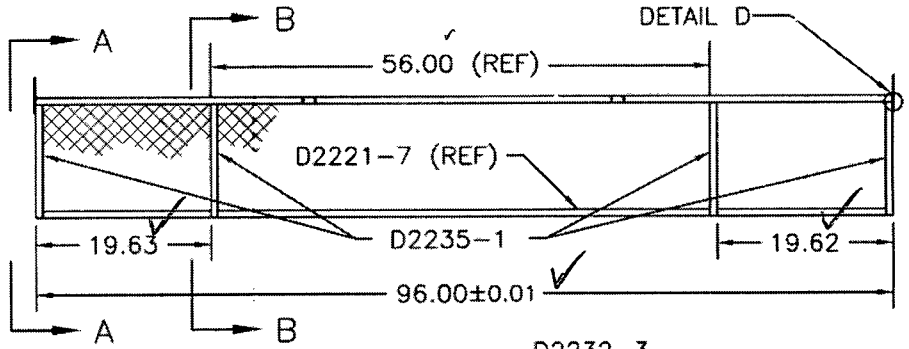

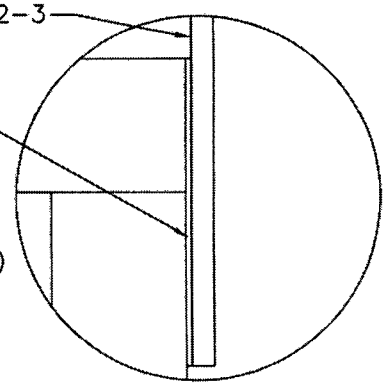

DETAIL D
(SCALE 1:1)
(TYP BOTH ENDS)

RELEASED
05.08.19

UNDER REVIEW
08.02.06
TUBING TO BE CHANGED TO 0.065 WALL

D2221 BASKET BASE ASSEMBLY

1) MESH MATERIAL: 3/4-16F EXPANDED SS (REF DART SPEC M304EX0.75-16F)
2) WELD PER DART QSI 004
3) TOLERANCES ARE PER DART QSI 018 UNLESS OTHERWISE NOTED
4) FINISH: POWDER COAT ENTIRE ASSEMBLY WHITE (4.3.5.2) PER DART QSI 005 4.3

DESIGN BW	DRAWN BY PH	DART AEROSPACE LTD HAWKESBURY, ONTARIO, CANADA	
CHECKED	APPROVED	DRAWING NO. D2221	REV. F
DATE 05.06.07		TITLE BASKET BASE ASSEMBLY (350)	SHEET 2 OF 3
			SCALE 1:20

Copyright © 1994 by DART AEROSPACE LTD
THIS DOCUMENT IS PRIVATE AND CONFIDENTIAL AND IS SUPPLIED ON THE EXPRESS CONDITION THAT IT IS NOT TO BE USED FOR ANY PURPOSE OR COPIED OR COMMUNICATED TO ANY OTHER PERSON WITHOUT WRITTEN PERMISSION FROM DART AEROSPACE LTD.

DESIGN	DRAWN BY	DART AEROSPACE LTD HAWKESBURY, ONTARIO, CANADA	
BW	PH		
CHECKED	APPROVED	DRAWING NO.	REV. F
		D2221	SHEET 3 OF 3
DATE		TITLE	SCALE
05.06.07		BASKET BASE ASSEMBLY (350)	1:8

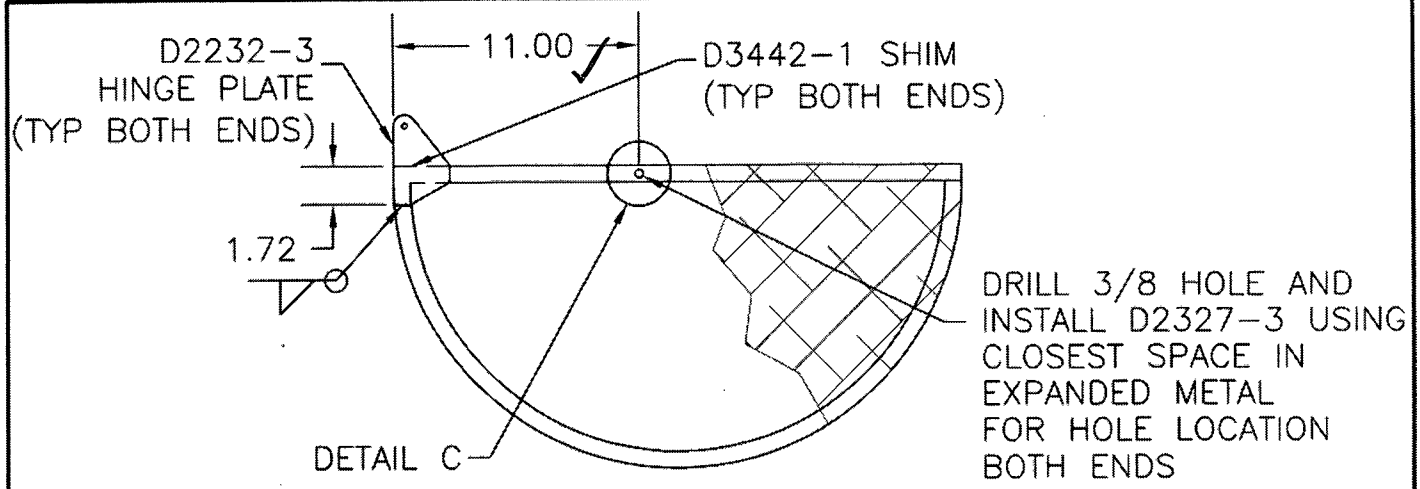

SECTION A–A SAME BOTH END RIBS

UNDER REVIEW
08. 05.06 PH
TUBING TO BE CHANGED TO 0.065 WALL

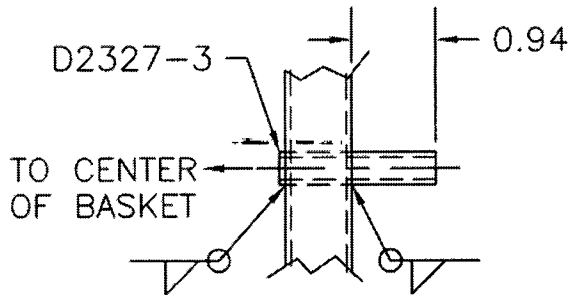

DETAIL C

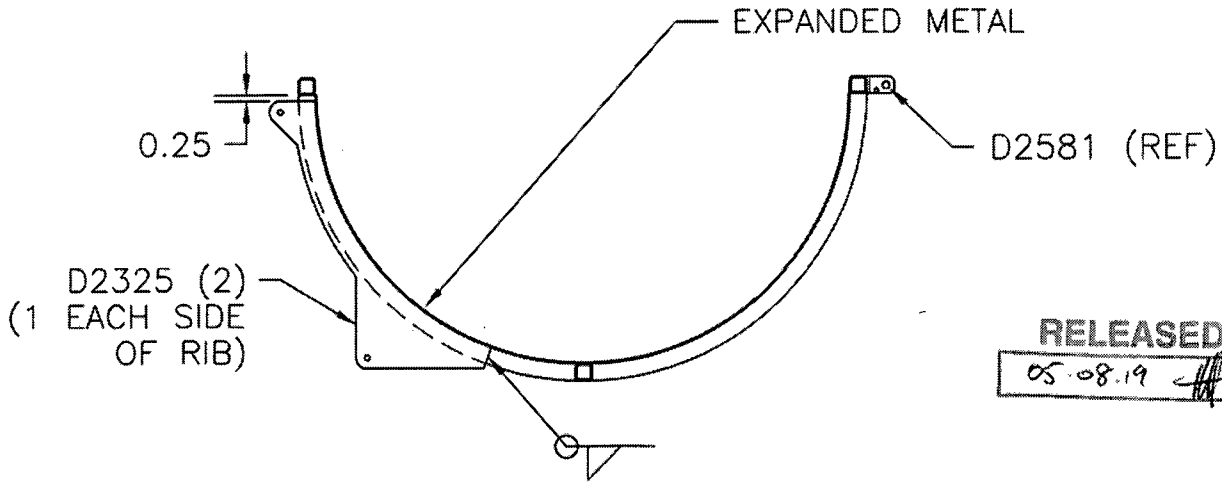

RELEASED
05.08.19

SECTION B–B SAME BOTH CENTER RIBS

Copyright © 1994 by DART AEROSPACE LTD

THIS DOCUMENT IS PRIVATE AND CONFIDENTIAL AND IS SUPPLIED ON THE EXPRESS CONDITION THAT IT IS NOT TO BE USED FOR ANY PURPOSE OR COPIED OR COMMUNICATED TO ANY OTHER PERSON WITHOUT WRITTEN PERMISSION FROM DART AEROSPACE LTD.

DESIGN	DRAWN BY	DART AEROSPACE LTD HAWKESBURY, ONTARIO, CANADA	
BW	CP		
CHECKED	APPROVED	DRAWING NO.	REV. D
		D2512	SHEET 1 OF 4
DATE		TITLE	SCALE
01.04.19		BASKET LID ASSEMBLY (350/212)	NTS

QA COPY ISSUED

RELEASED 01.04.27

A	95.11.21	NEW ISSUE
B	96.05.24	ADDED LATCH CHANNEL & LABEL PLATE
C	99.07.06	REMOVE DOUBLE SKIN SECTION, ADDED MEMBERS, INCORP. DEO 9074
D	01.04.19	CHANGE HINGE
D1	CP 03.01.20	ADD D2012-117 FOR D130-701-041
D2	CP 04.09.20	TACK WELD ANTI-SKID AREA

PARTS LIST FOR D2512 BASKET LID ASSEMBLY

PART NO	QUANTITY	LENGTH A	LENGTH B	DESCRIPTION
D2512-1	2	—	25.50	RIB
D2512-3	2	—	95.30	RIB
D2512-5	6	30.84	—	RIB
D2512-7	3	30.63	—	RIB
D2232-1	2	N/A	N/A	HINGE PLATE
D2236	4	N/A	N/A	RIB
D2327-1	2	N/A	N/A	BUSHING
D2506	1	N/A	N/A	LABEL PLATE
D2581	2	N/A	N/A	MOUNTING BRKT

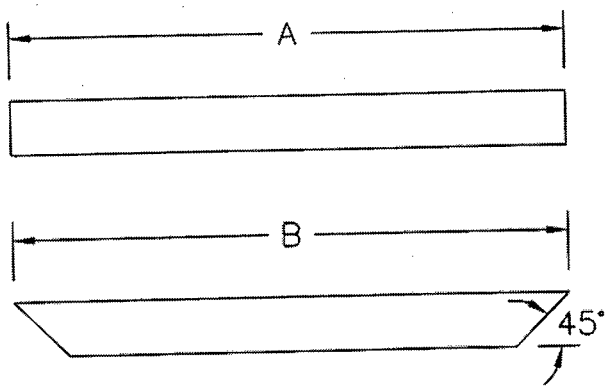

UNDER REVIEW
08.02.06
TUBING TO BE CHANGED TO 0.065 WALL

D2512-1/-3/-5/-7
CUT LENGTH/SHAPE PER DIAGRAM AND PARTS LIST
MATERIAL: AISI 304/316 SS, 3/4 X 3/4 X 0.060 WALL SQUARE TUBING
TOLERANCES ARE PER DART QSI 018 UNLESS OTHERWISE NOTED
ALL DIMENSIONS ARE IN INCHES

Copyright © 1995 by DART AEROSPACE LTD
THIS DOCUMENT IS PRIVATE AND CONFIDENTIAL AND IS SUPPLIED ON THE EXPRESS CONDITION THAT IT IS NOT TO BE USED FOR ANY PURPOSE OR COPIED OR COMMUNICATED TO ANY OTHER PERSON WITHOUT WRITTEN PERMISSION FROM DART AEROSPACE LTD.

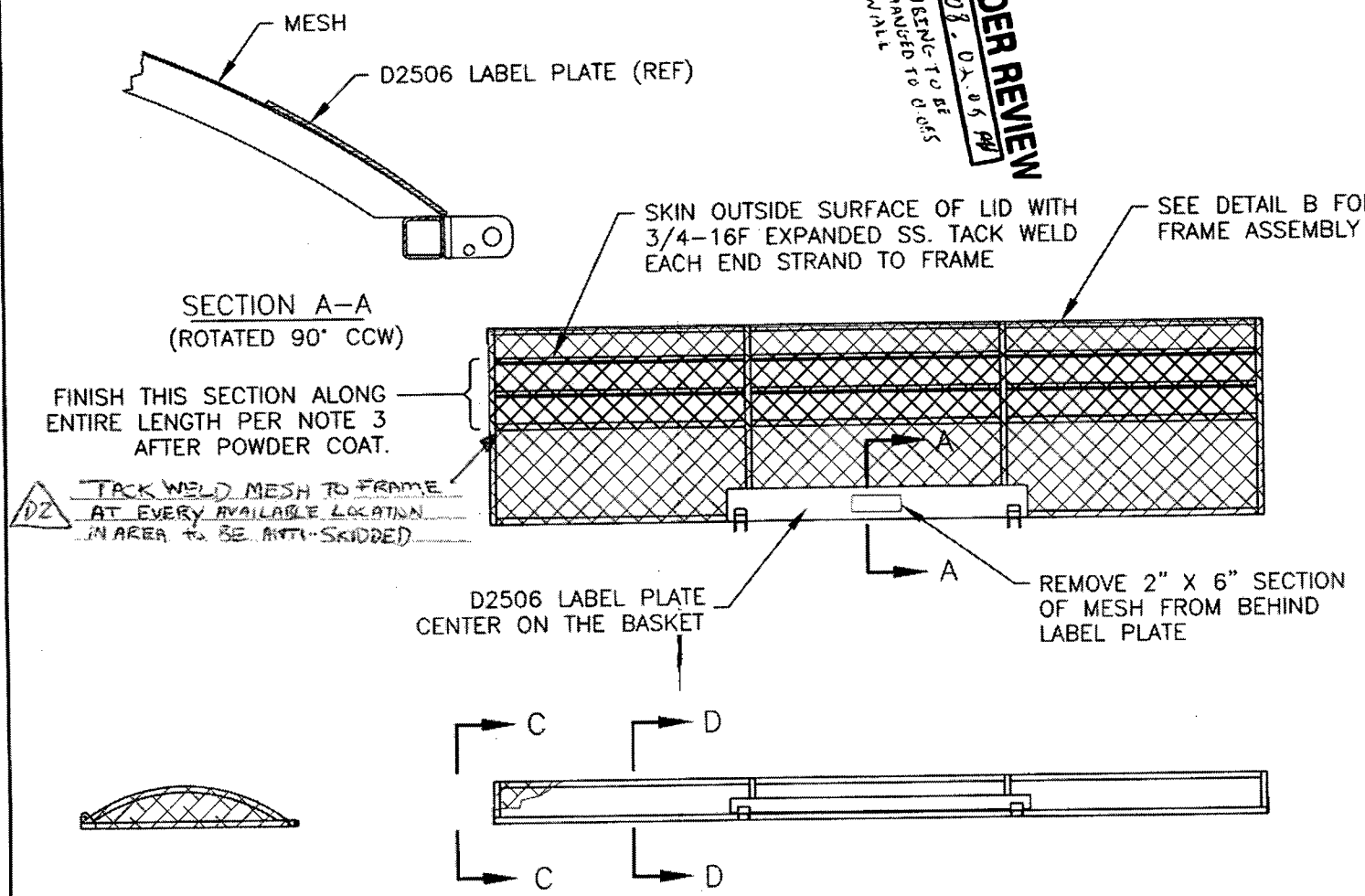

UNDER REVIEW
03.04.06
TUBING TO BE CHANGED TO 0.065 WALL

RELEASED
01.04.23

D2512 BASKET LID ASSEMBLY

1) MESH MATERIAL: 3/4–16F EXPANDED SS
2) FINISH: POWDER COAT ENTIRE ASSEMBLY WHITE (4.3.5.2) PER DART QSI 005 4.3
3) SPRAY PAINT BLACK INSIDE SURFACE
   APPLY BLACK ANTI-SKID TO OUTSIDE SURFACE PER DART QSI 005 4.4
4) TOLERANCES ARE PER DART QSI 018 UNLESS OTHERWISE NOTED
5) ALL DIMENSIONS ARE IN INCHES

DART

QA COPY ISSUED

DESIGN	DRAWN BY	DART AEROSPACE LTD HAWKESBURY, ONTARIO, CANADA	
BW			
CHECKED	APPROVED	DRAWING NO. D2512	REV. D
			SHEET 2 OF 4
DATE 01.04.19		TITLE BASKET LID ASSEMBLY (350/212)	SCALE 1:20

Copyright © 1995 by DART AEROSPACE LTD
THIS DOCUMENT IS PRIVATE AND CONFIDENTIAL AND IS SUPPLIED ON THE EXPRESS CONDITION THAT IT IS NOT TO BE USED FOR ANY PURPOSE OR COPIED OR COMMUNICATED TO ANY OTHER PERSON WITHOUT WRITTEN PERMISSION FROM DART AEROSPACE LTD.

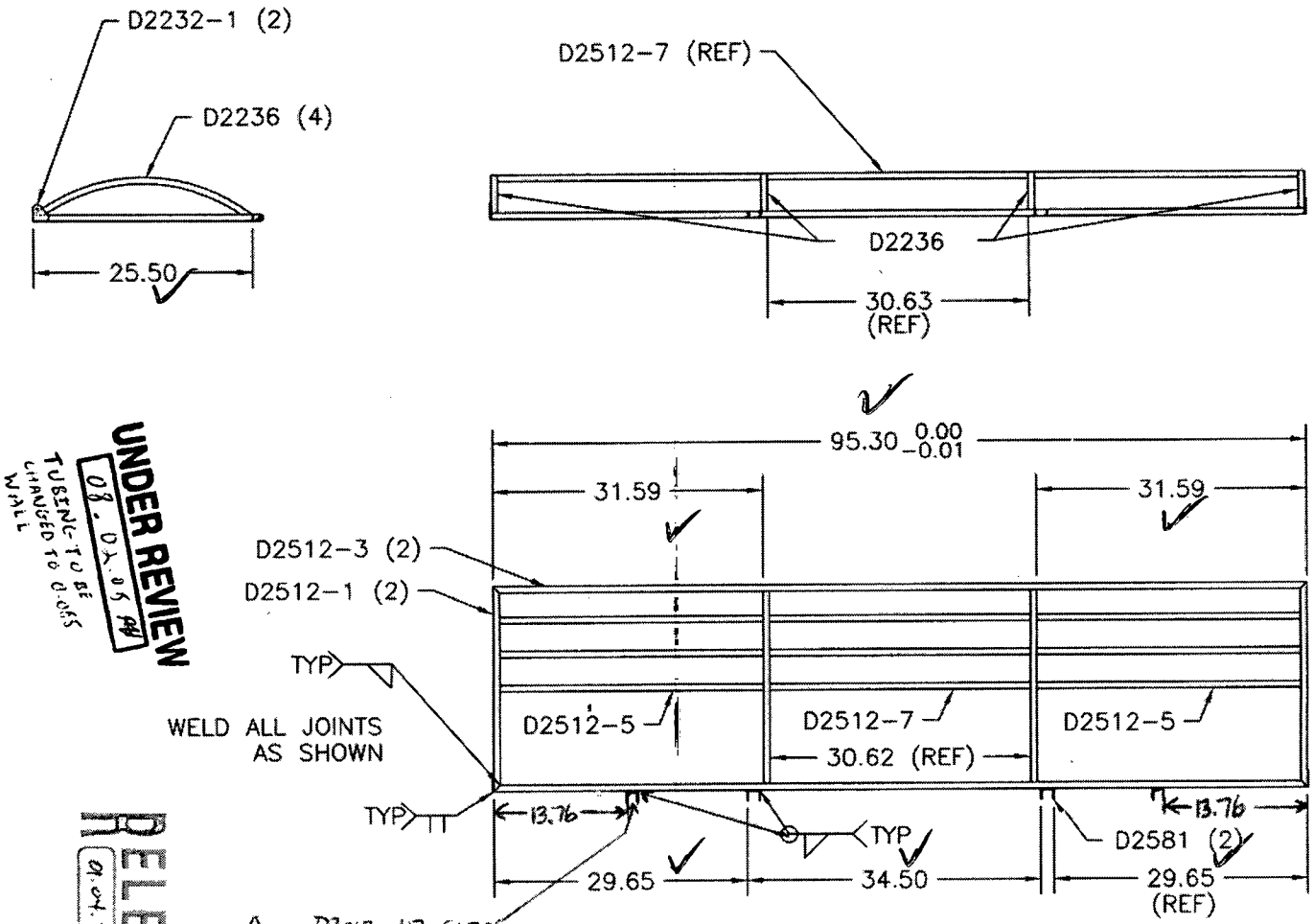

DETAIL B
FRAMEWORK SHOWN FOR CLARITY
TOLERANCES ARE PER DART QSI 018 UNLESS OTHERWISE NOTED
ALL DIMENSIONS ARE IN INCHES

UNDER REVIEW
08.02.05
TUBING TO BE CHANGED TO 0.065 WALL

RELEASED
01.04.27

DESIGN	DRAWN BY	DART AEROSPACE LTD	
BW		HAWKESBURY, ONTARIO, CANADA	
CHECKED	APPROVED	DRAWING NO. D2512	REV. D
			SHEET 3 OF 4
DATE 01.04.19		TITLE BASKET LID ASSEMBLY (350/212)	SCALE 1:20

QA COPY ISSUED

Copyright © 1995 by DART AEROSPACE LTD
THIS DOCUMENT IS PRIVATE AND CONFIDENTIAL AND IS SUPPLIED ON THE EXPRESS CONDITION THAT IT IS NOT TO BE USED FOR ANY PURPOSE OR COPIED OR COMMUNICATED TO ANY OTHER PERSON WITHOUT WRITTEN PERMISSION FROM DART AEROSPACE LTD.

DESIGN	DRAWN BY	DART AEROSPACE LTD HAWKESBURY, ONTARIO, CANADA	
BW	CP		
CHECKED	APPROVED	DRAWING NO.	REV. D
		D2512	SHEET 4 OF 4
DATE		TITLE	SCALE
01.04.19		BASKET LID ASSEMBLY (350/212)	1:8

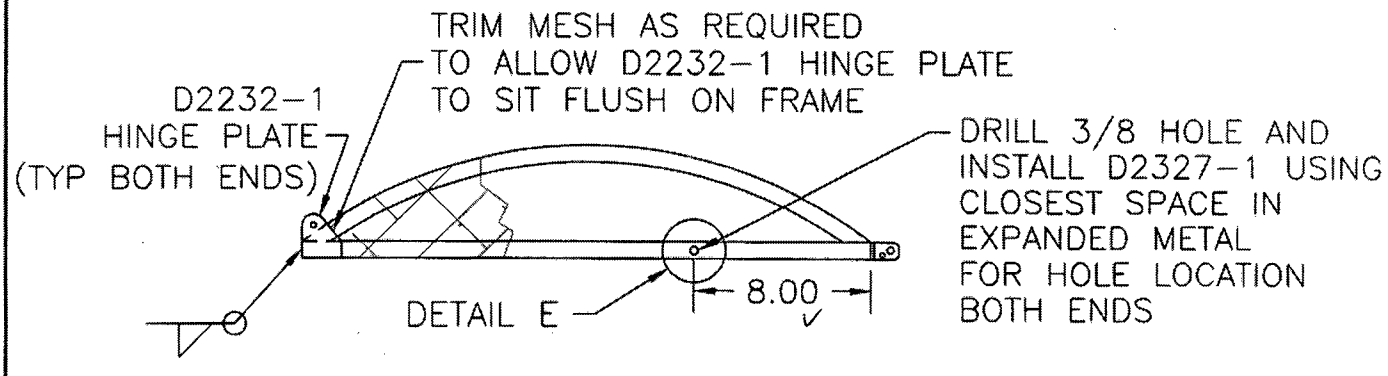

SECTION C-C SIMILIAR BOTH END RIBS

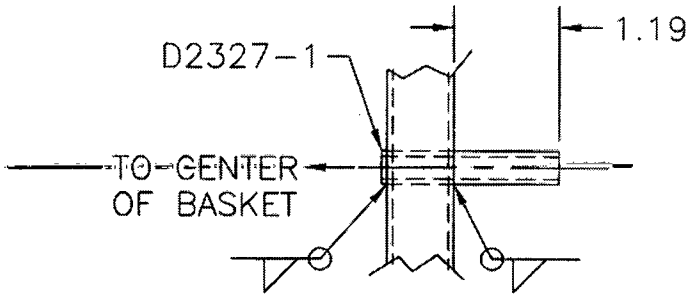

DETAIL E

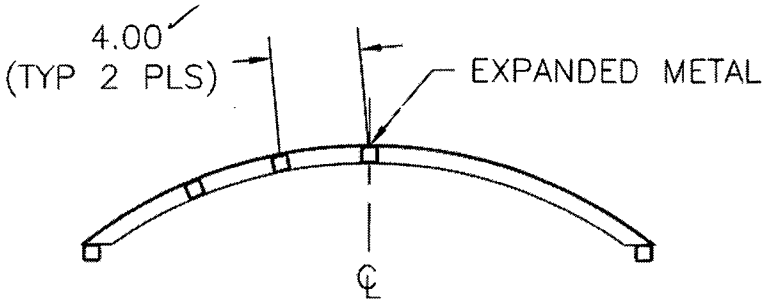

SECTION D-D SAME BOTH CENTER RIBS

UNDER REVIEW
08.02.05
TUBING TO BE CHANGED TO 0.065 WALL

RELEASED
01.04.27

Copyright © 1995 by DART AEROSPACE LTD

THIS DOCUMENT IS PRIVATE AND CONFIDENTIAL AND IS SUPPLIED ON THE EXPRESS CONDITION THAT IT IS NOT TO BE USED FOR ANY PURPOSE OR COPIED OR COMMUNICATED TO ANY OTHER PERSON WITHOUT WRITTEN PERMISSION FROM DART AEROSPACE LTD.

Dart Aerospace Ltd.

Date: Thursday, 11/24/2005 12:06:14 PM
User: Linda Lacelle

Process Sheet

Customer	: CU-DAR001 Dart Helicopters Services	Drawing Name	: BASKET BASE ASSEMBLY (350)
Job Number	: 24964A		
Estimate Number	: 10189		
P.O. Number	: N/A	Part Number	: D2221
This Issue	: 11/24/2005 S.O. No. : N/A	Drawing Number	: D2221 REV F
Prsht Rev.	: NC	Project Number	: N/A
First Issue	: N/A Type : LARGE FAB ASSY	Drawing Revision	: F
Previous Run	: 24825C	Material	: N/A
Written By	: SEE COMMENT BELOW	Due Date	: 1/15/2006 Qty: 1 Um: Each
Checked & Approved By	: SEE COMMENT BELOW		
Comment	: Est Rev:J 05.09.02 Added D3442-1KJ/JLM		

Additional Product

Job Number:

Seq. #:	Machine Or Operation:	Description :
1.0	D31661	Basket Hoop

Comment: Qty.: 4.0000 Each(s)/Unit Total : 4.0000 Each(s)
Pick:

Qty	Part Number	Description	Batch
4	D3166-1	RIB	B24880

06/01/13

2.0	D22323	Basket Hinge

Comment: Qty.: 2.0000 Each(s)/Unit Total : 2.0000 Each(s)
Pick:

Qty	Part Number	Description	Batch
2	D2232-3	Hinge bracket	B24527

06/01/13

3.0	D2325	Support Gusset (350 Bask

Comment: Qty.: 4.0000 Each(s)/Unit Total : 4.0000 Each(s)
Pick:

Qty	Part Number	Description	Batch
4	D2325	Support Gusset	B24529

06/01/13

4.0	D23273	Spacer Bushing

Comment: Qty.: 2.0000 Each(s)/Unit Total : 2.0000 Each(s)
Pick:

Qty	Part Number	Description	Batch
2	D2327-3	Bushing	B24530

06/01/13

Form: rprocess

Date: Thursday, 11/24/2005 12:06:15 PM
User: Linda Lacelle

Process Sheet

Customer: CU-DAR001 Dart Helicopters Services **Drawing Name:** BASKET BASE ASSEMBLY (350)

Job Number: 24964A **Part Number:** D2221

Job Number:

Seq. #:	Machine Or Operation:	Description :
5.0	D2581	Mounting Bracket

Comment: Qty.: 2.0000 Each(s)/Unit Total : 2.0000 Each(s)
Pick:

Qty	Part Number	Description	Batch
2	D2581	Mounting Bracket	B23584

06/01/13

6.0	D34421	Shim

Comment: Qty.: 2.0000 Each(s)/Unit Total : 2.0000 Each(s)
Pick:

Qty	Part Number	Description	Batch
2	D3442-1	Shim	B23544

06/01/13

7.0	M304EX07516F	Expanded Metal Flat Stai

Comment: Qty.: 37.8000 sf(s)/Unit Total : 37.8000 sf(s)
Pick:

Qty	Part Number	Description	Batch
36 sf	M304EX0.75-16F	Expanded Metal	M19149

06/01/17

8.0	M304TS0750W065	304 SQ Tube.75x.75x.065W

Comment: Qty.: 29.4000 f(s)/Unit Total : 29.4000 f(s)
Pick:
28' 3/4" x 3/4" x 0.063 wall 304/316 SStubing
Batch: M19447

06/01/13

9.0	LARGE FAB 1	LARGE FABRICATION RESOURCE 1

Comment: LARGE FABRICATION RESOURCE 1

1-Cut D2235-1 Rib from D3166-1 Rib As Per Dwg D2235

2-Drill hole in D2221-3 as per Dwg D2221

3-Deburr

4-Remove all markings on material before welding

5-Weld as per Dwg D2221 using Welding Table and corner JigDeburr as required

06/01/17

Form: rprocess

Date: Thursday, 11/24/2005 12:06:15 PM
User: Linda Lacelle

Process Sheet

Customer: CU-DAR001 Dart Helicopters Services **Drawing Name:** BASKET BASE ASSEMBLY (350)

Job Number: 24964A **Part Number:** D2221

Job Number:

Seq. #:	Machine Or Operation:	Description :
10.0	QC9/6	DDIMENSIONAL & WELDING INSPECTION
	Comment: DDIMENSIONAL & WELDING INSPECTION	PD 06-01-17
11.0	POWDER COATING	POWDER COATING
	Comment: POWDER COATING Powder Coat White Gloss (Ref: 4.3.5.1) as per QSI 005 4.3	FC 06 01 17
12.0	QC3	INSPECT POWDER COAT/CHEMICAL CONVERSION
	Comment: INSPECT POWDER COAT/CHEMICAL CONVERSION	NM 06 01 18
13.0	HAND FINISHING1	HAND FINISHING RESOURCE #1
	Comment: HAND FINISHING RESOURCE #1 Seal support gusset seam with white sikaflex-291 Batch: H19734 Expiry date: 06:06:20	SAD 06:01:18
14.0	DC	DOCUMENT CONTROL
	Comment: DOCUMENT CONTROL Inspection Level 21	06/01/19

Job Completion 06.01.19

Form: rprocess

Dart Aerospace Ltd.

Date: Thursday, 11/24/2005 12:06:32 PM
User: Linda Lacelle

Process Sheet

ustomer	: CU-DAR001 Dart Helicopters Services	Drawing Name	: 350/212/130 BASKET LID
Job Number	: 24964B		
Estimate Number	: 10193		
P.O. Number	: N/A	Part Number	: D2512
This Issue	: 11/24/2005 S.O. No. : N/A	Drawing Number	: D2512 REV D1
Prsht Rev.	: NC	Project Number	: N/A
First Issue	: N/A Type : LARGE FAB ASSY	Drawing Revision	: D1
Previous Run	: 24836A	Material	: N/A
Written By	: SEE COMMENT BELOW	Due Date	: 1/15/2006 Qty: 1 Um: Each
Checked & Approved By	: SEE COMMENT BELOW		
Comment	: Rev Est:M 03.01.31 Added D2012-117 for D130-701-041 KJ/ RF		

Additional Product

Job Number:

Seq. #:	Machine Or Operation:	Description :
1.0	M304TS0750W065	304 SQ Tube.75x.75x.065W

Comment: Qty.: 30.4931 f(s)/Unit Total : 30.4931 f(s)
Pick:
3/4"x3/4" 304/316 SS tube .063" wall
Batch: M19447 06/01/13

2.0	D31663	Basket Hoop

Comment: Qty.: 1.0000 Each(s)/Unit Total : 1.0000 Each(s)
Pick:

Qty	Part Number	Description	Batch
1	D3166-3	Basket Hoop	B24546

06/01/13

3.0	D2506	Placard

Comment: Qty.: 1.0000 Each(s)/Unit Total : 1.0000 Each(s)
Pick:

Qty	Part Number	Description	Batch
1	D2506	Label Plate	B23563

06/01/13

4.0	D23271	Spacer Bushing

Comment: Qty.: 2.0000 Each(s)/Unit Total : 2.0000 Each(s)
Pick:

Qty	Part Number	Description	Batch
2	D2327-1	Bushing	B24873

06/01/13

Form: rprocess

Date: Thursday, 11/24/2005 12:06:33 PM
User: Linda Lacelle

Process Sheet

Customer: CU-DAR001 Dart Helicopters Services **Drawing Name:** 350/212/130 BASKET LID

Job Number: 24964B **Part Number:** D2512

Job Number:

Seq. #:	Machine Or Operation:	Description :
5.0	D22321	Hinge

Comment: Qty.: 2.0000 Each(s)/Unit Total : 2.0000 Each(s)
Pick:

Qty	Part Number	Description	Batch
2	D2232-1	Hinge plate	B23445

06/01/13

6.0	D2581	Mounting Bracket

Comment: Qty.: 2.0000 Each(s)/Unit Total : 2.0000 Each(s)
Pick:

Qty	Part Number	Description	Batch
2	D2581	Mounting Bracket	B23584

06/01/13

7.0	M304EX07516F	Expanded Metal Flat Stai

Comment: Qty.: 18.0000 sf(s)/Unit Total : 18.0000 sf(s)
Pick:

Qty	Part Number	Description	Batch
18 sf	M304EX0.75-16F	Expanded Metal	M19149

06/01/17

8.0	LARGE FAB 1	LARGE FABRICATION RESOURCE 1

Comment: LARGE FABRICATION RESOURCE 1

1-Cut 3/4" x 3/4" square tubing as per Dwg D2512

2-Cut (4) D2236 From D3166-3

3-Drill holes in D2512-1 as per Dwg D2512 using Drill Jig DT8305

~~4-D2012-117 is included in D3172-041 EC130 Basket Base BOM.~~
~~EC130 Basket only~~
~~Pick:~~

~~Qty~~	~~Part Number~~	~~Description~~	~~Batch~~
~~2~~	~~D2012-117~~	~~Clevis~~	

06/01/17

5-Weld as per Dwg D2512 using Welding Table and corner Jig Deburr as required

Form: rprocess

Date: Thursday, 11/24/2005 12:06:33 PM
User: Linda Lacelle

Process Sheet

Customer: CU-DAR001 Dart Helicopters Services **Drawing Name:** 350/212/130 BASKET LID

Job Number: 24964B **Part Number:** D2512

Job Number:

Seq. #:	Machine Or Operation:	Description :
9.0	QC9/6	DDIMENSIONAL & WELDING INSPECTION
	Comment: DDIMENSIONAL & WELDING INSPECTION	PD 06-01-17
10.0	POWDER COATING	POWDER COATING
	Comment: POWDER COATING Powder Coat White Gloss (Ref: 4.3.5.1) as per QSI 005 4.3	FC 06 01 17
11.0	HAND FINISHING1	HAND FINISHING RESOURCE #1
	Comment: HAND FINISHING RESOURCE #1 Wing Walk and Spray Paint black as per Dwg D2512 and QSI 005 4.4	Spray: m19279 Batch: m18276 FC 06 01 18
12.0	QC3	INSPECT POWDER COAT/CHEMICAL CONVERSION
	Comment: INSPECT POWDER COAT/CHEMICAL CONVERSION	M 06 01 18

Job Completion

LEVEL 21 INSPECTION 06/01/19
06-01-19

Form: rprocess

Dart Aerospace Ltd.

Date: Thursday, 11/24/2005 12:05:56 PM
User: Linda Lacelle

Process Sheet

Customer	: CU-DAR001 Dart Helicopters Services	**Drawing Name**	: HELI UTILITY BASKET LH/RH
Job Number	: 24964		
Estimate Number	: 10197		
P.O. Number	: N/A	**Part Number**	: D350607041
This Issue	: 11/24/2005 **S.O. No.** : N/A	**Drawing Number**	: D350-607 REV F
Prsht Rev.	: NC	**Project Number**	: N/A
First Issue	: N/A **Type** : LARGE FAB ASSY	**Drawing Revision**	: F
Previous Run	: N/A	**Material**	: N/A
Written By	: SEE COMMENT BELOW	**Due Date**	: 1/15/2006 **Qty:** 1 **Um:** Each
Checked & Approved By	: SEE COMMENT BELOW		
Comment	: Est Rev:M 05.09.02 Added D2856-400-720 KJ/JLM		

Additional Product

Job Number:

Seq. #:	Machine Or Operation:	Description :
1.0	24964A	BASKET BASE ASSEMBLY (350)
	Comment: Sub-Component BASKET BASE ASSEMBLY (350)	
2.0	24964B	350/212/130 BASKET LID
	Comment: Sub-Component 350/212/130 BASKET LID	
3.0	DC	DOCUMENT CONTROL
	Comment: DOCUMENT CONTROL Photocopy bluefile & type labels per PPPD350-607-041 CHG006	DH 06/01/19
4.0	PACKAGING 1	PACKAGING RESOURCE #1
	Comment: PACKAGING RESOURCE #1 Pick: Assemby Kit	
5.0	D2022101	Spacer
	Comment: Qty.: 2.0000 Each(s)/Unit Total : 2.0000 Each(s) Pick: Assemby Kit Qty Part Number Description Batch 2 D2022-101 Spacer B23396	
6.0	D2258200	Weight Placard 200lb
	Comment: Qty.: 1.0000 Each(s)/Unit Total : 1.0000 Each(s) Pick: Assemby Kit Qty Part Number Description Batch 1 D2258-200 Label B11837	763

Form: rprocess

Date: Thursday, 11/24/2005 12:05:56 PM
User: Linda Lacelle

Process Sheet

Customer: CU-DAR001 Dart Helicopters Services **Drawing Name:** HELI.UTILITY BASKET LH/RH

Job Number: 24964 **Part Number:** D350607041

Job Number:

Seq. #:	Machine Or Operation:	Description :
7.0	D2332041	Lid Prop Assembly 6.69"

Comment: Qty.: 1.0000 Each(s)/Unit Total : 1.0000 Each(s)
Pick: Assemby Kit

Qty	Part Number	Description	Batch
1	D2332-041	Prop Ass'y	B24531

8.0	D2530	Handle Weldment

Comment: Qty.: 1.0000 Each(s)/Unit Total : 1.0000 Each(s)
Pick: Assemby Kit

Qty	Part Number	Description	Batch
1	D2530	Handle Weldment	B24111

9.0	D2535	Spring

Comment: Qty.: 2.0000 Each(s)/Unit Total : 2.0000 Each(s)
Pick: Assemby Kit

Qty	Part Number	Description	Batch
2	D2535	Spring	B24532

10.0	D2537	Bushing

Comment: Qty.: 2.0000 Each(s)/Unit Total : 2.0000 Each(s)
Pick: Assemby Kit

Qty	Part Number	Description	Batch
2	D2537	Bushing	B23948

11.0	D27283	Dart Logo label large

Comment: Qty.: 2.0000 Each(s)/Unit Total : 2.0000 Each(s)
Pick: Assemby Kit

Qty	Part Number	Description	Batch
2	D2728-3	Label	B22553

12.0	D2931	Bumper

Comment: Qty.: 2.0000 Each(s)/Unit Total : 2.0000 Each(s)
Pick: Assemby Kit

Qty	Part Number	Description	Batch
2	D2931	Bumper	~~B22~~ B21139

Form: rprocess

Date: Thursday, 11/24/2005 12:05:56 PM
User: Linda Lacelle

Process Sheet

Customer: CU-DAR001 Dart Helicopters Services **Drawing Name:** HELI UTILITY BASKET LH/RH

Job Number: 24964 **Part Number:** D350607041

Job Number:

Seq. #:	Machine Or Operation:	Description :
13.0	AN316A	Bolt

Comment: Qty.: 2.0000 Each(s)/Unit Total : 2.0000 Each(s)
Pick: Assemby Kit

Qty	Part Number	Description	Batch
2	AN3-16A	Bolt	M17073

14.0	AN47A	Bolt

Comment: Qty.: 2.0000 Each(s)/Unit Total : 2.0000 Each(s)
Pick: Assemby Kit

Qty	Part Number	Description	Batch
2	AN4-7A	Bolt	M17697

15.0	AN422A	Bolt

Comment: Qty.: 1.0000 Each(s)/Unit Total : 1.0000 Each(s)
Pick: Assemby Kit

Qty	Part Number	Description	Batch
1	AN4-22A	Bolt	M17280

16.0	AN424A	Bolt

Comment: Qty.: 1.0000 Each(s)/Unit Total : 1.0000 Each(s)
Pick: Assemby Kit

Qty	Part Number	Description	Batch
1	AN4-24A	Bolt	M17204

17.0	AN517A	Bolt

Comment: Qty.: 4.0000 Each(s)/Unit Total : 4.0000 Each(s)
Pick: Assemby Kit

Qty	Part Number	Description	Batch
4	AN5-17A	Bolt	M16273

Form: rprocess

Date: Thursday, 11/24/2005 12:05:56 PM
User: Linda Lacelle

Process Sheet

Customer: CU-DAR001 Dart Helicopters Services **Drawing Name:** HELI UTILITY BASKET LH/RH

Job Number: 24964 **Part Number:** D350607041

Job Number:

Seq. #:	Machine Or Operation:	Description :
18.0	AN960JD8	Washer

Comment: Qty.: 2.0000 Each(s)/Unit Total : 2.0000 Each(s)
Pick: Assemby Kit

Qty	Part Number	Description	Batch
2	AN960JD8	Washer	M11729

19.0	AN960JD416	Washer

Comment: Qty.: 2.0000 Each(s)/Unit Total : 2.0000 Each(s)
Pick: Assemby Kit

Qty	Part Number	Description	Batch
2	AN960JD416	Washer	~~145579~~ M18431

20.0	AN960JD416L	Washer

Comment: Qty.: 2.0000 Each(s)/Unit Total : 2.0000 Each(s)
Pick: Assemby Kit

Qty	Part Number	Description	Batch
2	AN960JD416L	Washer	M14977

21.0	AN960JD516	Washer

Comment: Qty.: 4.0000 Each(s)/Unit Total : 4.0000 Each(s)
Pick: Assemby Kit

Qty	Part Number	Description	Batch
4	AN960JD516	Washer	M18254

22.0	AN9704	Washer

Comment: Qty.: 4.0000 Each(s)/Unit Total : 4.0000 Each(s)
Pick: Assemby Kit

Qty	Part Number	Description	Batch
4	AN970-4	Washer	M16895

23.0	MS20600AD4W3	Cherry Rivets

Comment: Qty.: 2.0000 Each(s)/Unit Total : 2.0000 Each(s)
Pick: Assemby Kit

Qty	Part Number	Description	Batch
2	MS20600AD4W3	Rivet	M13767

Form: rprocess

Date: Thursday, 11/24/2005 12:05:56 PM
User: Linda Lacelle

Process Sheet

Customer: CU-DAR001 Dart Helicopters Services **Drawing Name:** HELI UTILITY BASKET LH/RH

Job Number: 24964 **Part Number:** D350607041

Job Number:

Seq. #:	Machine Or Operation:	Description :
24.0	MS21042L3	Nut

Comment: Qty.: 2.0000 Each(s)/Unit Total : 2.0000 Each(s)
Pick: Assemby Kit

Qty	Part Number	Description	Batch
2	MS21042L3	Nut (or -3)	M18180

25.0	MS21042L4	Nut

Comment: Qty.: 4.0000 Each(s)/Unit Total : 4.0000 Each(s)
Pick: Assemby Kit

Qty	Part Number	Description	Batch
4	MS21042L4	Nut (or -4)	M17997

26.0	MS21042L5	Nut

Comment: Qty.: 4.0000 Each(s)/Unit Total : 4.0000 Each(s)
Pick: Assemby Kit

Qty	Part Number	Description	Batch			
4	MS21042L5	Nut (or -5)	M17653	SAD	06:01:18	1

27.0	D2221	Basket Base

Comment: Qty.: 1.0000 Each(s)/Unit Total : 1.0000 Each(s)
Pick: Assemby Kit

Qty	Part Number	Description	Batch			
1	D2221	Basket Base	24964A	SAD	06:01:18	1

28.0	D2512	Basket Lid

Comment: Qty.: 1.0000 Each(s)/Unit Total : 1.0000 Each(s)
Pick: Assemby Kit

Qty	Part Number	Description	Batch			
1	D2512	Lid	24964B	SAD	06:01:18	1

29.0	SMALL FAB 1	SMALL & MEDIUM FAB RESOURCE 1

Comment: SMALL & MEDIUM FAB RESOURCE 1
Assemble as per Dwg D350-607 SAD 06:01:18 1

Form: rprocess

Date: Thursday, 11/24/2005 12:05:56 PM
User: Linda Lacelle

Process Sheet

Customer: CU-DAR001 Dart Helicopters Services **Drawing Name:** HELI UTILITY BASKET LH/RH

Job Number: 24964 **Part Number:** D350607041

Job Number:

Seq. #:	Machine Or Operation:	Description :
30.0	QC5	INSPECT WORK TO CURRENT STEP

06.01.19 1

Comment: INSPECT WORK TO CURRENT STEP

31.0	PACKAGING 1	PACKAGING RESOURCE #1

Comment: PACKAGING RESOURCE #1
Pick: Packing Kit

32.0	D22301	Mounting Lug

Comment: Qty.: 4.0000 Each(s)/Unit Total : 4.0000 Each(s)
Pick: Packing Kit

Qty	Part Number	Description	Batch
4	D2230-1	Lug.	B23724B

33.0	D22303	Mounting Lug

Comment: Qty.: 4.0000 Each(s)/Unit Total : 4.0000 Each(s)
Pick: Packing Kit

Qty	Part Number	Description	Batch
4	D2230-3	Clamp	B24395

34.0	D23241	Strut Assembly

Comment: Qty.: 1.0000 Each(s)/Unit Total : 1.0000 Each(s)
Pick: Packing Kit

Qty	Part Number	Description	Batch
1	*D2324-1	Strut Ass'y	B24528

35.0	D2856400720	Abrasion Strip

Comment: Qty.: 4.0000 Each(s)/Unit Total : 4.0000 Each(s)
Pick: Packing Kit

Qty	Part Number	Description	Batch
4	D2856-400-720	Abrasion Strip	B24237A

Form: rprocess

Date: Thursday, 11/24/2005 12:05:56 PM
User: Linda Lacelle

Process Sheet

Customer: CU-DAR001 Dart Helicopters Services **Drawing Name:** HELI UTILITY BASKET LH/RH

Job Number: 24964 **Part Number:** D350607041

Job Number:

Seq. #:	Machine Or Operation:	Description :
36.0	AN412A	Bolt

Comment: Qty.: 5.0000 Each(s)/Unit Total : 5.0000 Each(s)
Pick: Packing Kit
Qty Part Number Description Batch
5 AN4-12A Bolt M17771

37.0	AN413A	Bolt

Comment: Qty.: 8.0000 Each(s)/Unit Total : 8.0000 Each(s)
Pick: Packing Kit
Qty Part Number Description Batch
8 AN4-13A Bolt M18499

38.0	AN960JD416	Washer

Comment: Qty.: 26.0000 Each(s)/Unit Total : 26.0000 Each(s)
Pick: Packing Kit
Qty Part Number Description Batch
26 AN960JD416 Washer M18431

39.0	MS21042L4	Nut

Comment: Qty.: 13.0000 Each(s)/Unit Total : 13.0000 Each(s)
Pick: Packing Kit
Qty Part Number Description Batch
13 MS21042L4 Nut (or -4) M17997 Pu 6/1/19 (1)

40.0	QC4	INSPECT 100% KITS FOR COMPLETENESS

Comment: INSPECT 100% KITS FOR COMPLETENESS CZ 06/01/19 (1)

41.0	PACKAGING 1	PACKAGING RESOURCE #1

Comment: PACKAGING RESOURCE #1
Identify and pack for shipping as per PPP, D350-607-041
Location: RECD - G Pu 6/1/19 (1)

Work Order ID 24964

January-30-13 12:39:17 PM

24964

Item ID: D350-607-~~041~~ 042

Revision ID:

Item Name: Heli-Utility-Basket, LH

Accept *N900040100*

Setup Start *NS1*

Stop *NS2*

Start Date: 1/30/13 **Start Qty:** 1.00 *1*

Required Date: 1/31/13 **Req'd Qty:** 1.00 *1*

Reference:

Cust Item ID:

Customer:

Approvals: **Process Plan:** W **Date:** _____ **Tooling:** _____ **Date:** _____

QC: _____ **Date:** _____ **SPC (Y/N):** _____ **Date:** _____

Run Start *NR1*

Stop *NR2*

Sequence ID/ Work Center ID	Operation Description	Set Up/ Run Hours	Tool ID	Tool #	Plan Code	Accept Qty	Reject Qty	Reject Number	Insp. Stamp
Draw Nbr	**Revision Nbr**								
D350-607-1	Rev A								
130	QC5- Inspect part completeness to step on W/O	0.00							DAS 29
130						1	Ø		
QC	**Memo** 042	0.00							
Quality Control	customer supplied material 1 x D350-607-~~041~~ B24964 returned for re-certification. inspection to be carried out in accordance with Eagle MPM, Chapter 28 ATTACHED.								
140	Pick Kit	0.00							DAS 29
140						1	Ø		
Packaging	**Memo**	0.00							
Packaging	ensure kit is returned with basket								

DQA: _____ Date: _____

NCR: Yes / No

WORK ORDER NON-CONFORMANCE / UPDATE

QA Closed: Date:

Work Order: _____

Part No. _____

NCR No. _____

DISPOSITION

- Rework ☐
- Scrap ☐
- Use-as-is ☐
- Work Order Update ☐

AGAINST DEPARTMENT/PROCESS

- Skid-tube ☐
- Machining ☐
- Thermoforming ☐
- Large Fab ☐
- Crosstube ☐
- Small Fab ☐
- Finishing ☐
- Composite ☐
- Water Jet ☐
- Prod. Eng. Coor. ☐
- Rec/Store/Packaging ☐
- Supplier ☐
- Engineering ☐
- Quality ☐
- Other ☐

Root Cause		Date	Step	Qty	Description of work order update or Non-conformance	Initial Chief Eng	Action Description	Sign & Date	Verification	QC Inspector
Doc/Data	☐									
Equip/Tooling	☐									
Operator	☐									
Material	☐									
Setup	☐									
Other	☐									
Process	☐									
Supplier	☐									
Training	☐									
Unapproved	☐									

FAULT CATEGORY

Landing Gear

- ☐ Bending
- ☐ Centre Not Concentric to O/S
- ☐ Cracks
- ☐ Crushed/Crimped
- ☐ Cuffs
- ☐ Heat Treat
- ☐ Inspection Strip in Tube
- ☐ Ripples in Bend
- ☐ Torque Waves in Extrusion
- ☐ Turning Sequence
- ☐ Wave/Twist in Tube

General

- ☐ Bend
- ☐ BOM/Route
- ☐ Broken/Damaged
- ☐ Burrs
- ☐ Contamination
- ☐ Countersink
- ☐ Cut Too Short
- ☐ Drill Holes
- ☐ Drawing
- ☐ Finish
- ☐ Folio
- ☐ Grain
- ☐ Hardware
- ☐ Inspection Incomplete
- ☐ Instructions Incomplete/Unclear
- ☐ Maintenance
- ☐ Mislabeled
- ☐ Misread
- ☐ Offset
- ☐ Out of Calibration
- ☐ Out of Sequence
- ☐ Outside Dimensions
- ☐ Ovalized
- ☐ Over/Under tolerance
- ☐ Part Incorrect
- ☐ Part Lost/Missing
- ☐ Part Moved
- ☐ Positioned Wrong
- ☐ Power Loss/Surge
- ☐ Pressure/Forced
- ☐ Temperature/Cure
- ☐ Weld
- ☐ Wrong Stock Pulled
- ☐ Other _____

Work Order ID 24964

January-30-13 12:39:17 PM

24964

Item ID: D350-607-~~041~~ 042 **Accept** *N900040100* **Setup Start** *NS1*

Revision ID: **Stop** *NS2*

Item Name: Heli-Utility-Basket, LH

Start Date: 1/30/13 **Start Qty:** 1.00 *1* **Cust Item ID:**

Required Date: 1/31/13 **Req'd Qty:** 1.00 *1* **Customer:**

Reference:

Run Start *NR1*

Approvals: **Process Plan:** _____ **Date:** _____ **Tooling:** _____ **Date:** _____

Stop *NR2*

QC: _____ **Date:** _____ **SPC (Y/N):** _____ **Date:** _____

Sequence ID/ Work Center ID	Operation Description	Set Up/ Run Hours	Tool ID	Tool #	Plan Code	Accept Qty	Reject Qty	Reject Number	Insp. Stamp
150	QC4- 100% Inspect kits for completeness	0.00							DAS 29
150						1	Ø		
QC	Memo	0.00							
Quality Control									
160		0.00							
160	Packaging								
Packaging	Memo	0.00							
Packaging	re-package using existing B/N Identify and pack for shipping as per PPP D350-607-041 Location:_____								
170	QC21- Final Inspection - Work Order Release	0.00							
170									
QC	Memo	0.00							
Quality Control									

DQA: _____ Date: _____

NCR: Yes / No

WORK ORDER NON-CONFORMANCE / UPDATE

QA Closed: Date:

Work Order: _____

Part No. _____

NCR No. _____

DISPOSITION

- Rework ☐
- Scrap ☐
- Use-as-is ☐
- Work Order Update ☐

AGAINST DEPARTMENT/PROCESS

- Skid-tube ☐
- Machining ☐
- Thermoforming ☐
- Large Fab ☐
- Crosstube ☐
- Small Fab ☐
- Finishing ☐
- Composite ☐
- Water Jet ☐
- Prod. Eng. Coor. ☐
- Rec/Store/Packaging ☐
- Supplier ☐
- Engineering ☐
- Quality ☐
- Other ☐

Root Cause		Date	Step	Qty	Description of work order update or Non-conformance	Initial Chief Eng	Action Description	Sign & Date	Verification	QC Inspector
Doc/Data	☐									
Equip/Tooling	☐									
Operator	☐									
Material	☐									
Setup	☐									
Other	☐									
Process	☐									
Supplier	☐									
Training	☐									
Unapproved	☐									

FAULT CATEGORY

Landing Gear

- ☐ Bending
- ☐ Centre Not Concentric to O/S
- ☐ Cracks
- ☐ Crushed/Crimped
- ☐ Cuffs
- ☐ Heat Treat
- ☐ Inspection Strip in Tube
- ☐ Ripples in Bend
- ☐ Torque Waves in Extrusion
- ☐ Turning Sequence
- ☐ Wave/Twist in Tube

General

- ☐ Bend
- ☐ BOM/Route
- ☐ Broken/Damaged
- ☐ Burrs
- ☐ Contamination
- ☐ Countersink
- ☐ Cut Too Short
- ☐ Drill Holes
- ☐ Drawing
- ☐ Finish
- ☐ Folio
- ☐ Grain
- ☐ Hardware
- ☐ Inspection Incomplete
- ☐ Instructions Incomplete/Unclear
- ☐ Maintenance
- ☐ Mislabeled
- ☐ Misread
- ☐ Offset
- ☐ Out of Calibration
- ☐ Out of Sequence
- ☐ Outside Dimensions
- ☐ Ovalized
- ☐ Over/Under tolerance
- ☐ Part Incorrect
- ☐ Part Lost/Missing
- ☐ Part Moved
- ☐ Positioned Wrong
- ☐ Power Loss/Surge
- ☐ Pressure/Forced
- ☐ Temperature/Cure
- ☐ Weld
- ☐ Wrong Stock Pulled
- ☐ Other

_____

_____

_____

UNDOCUMENTED PARTS CHECK LIST

1. Receiving and Documentation

1.1 Ensure all Documents raised for this part are placed in the work order file. EAGLE COPTERS 49952

1.2 Work Order Number: DART AEROSPACE 24964 EAGLE COPTERS 49952

1.3 Item Number:

2. Identification *(Reference MPM section 28.2)*

2.1 Documents received with parts: PICK LIST SHIP NOTE

2.2 Identification Tag/Plate: PICTURES ATTACHED

2.3 OEM Markings: PICTURES ATTACHED

2.4 Description: HELI-UTILITY BASKET LH/RH

2.5 OEM W.O./Part #: 24964 / D350-607-041042

2.6 Part Number: D350-607-041

2.7 OEM Inspection Stamp: ATTACHED

2.8 Serial Number: 810363

2.9 Modification Status: CHG 002

2.10 Vendor/Supplier Name: DART AEROSPACE

2.11 Other:

2.12 Parts received from Surplus Inventory:

2.13 Removed from Aircraft Make/Model/Registration EUROCOPTER AS350 JA508A

2.14 Aircraft S/N: REMOVED FROM JA508A

TSN: U/K CSN: U/K

Other:

EAGLE COPTERS

UNDOCUMENTED PARTS CHECK LIST

Sign.

3. Eligibility *(Reference MPM section 28.3)*

3.1 Is the parts eligible for recertification by Eagle Copters Maintenance Ltd.

☑ Yes ☐ No (if no, discontinue process and send part to Quarantine Stores) SRC

Sign.

4. Exceptions *(Reference MPM section 28.4)*

4.1 Does the part meet the criteria of an exceptional part

☐ Yes ☒ No (if yes, discontinue process and send part to Quarantine Stores) SRC

Sign.

5. Documentation *(Reference MPM section 28.5)*

5.1 Confirm that all documentation is attached to work order and item file. SRC

This step may not be completed until following step 11 (Acceptability).

6. Authenticity *(Reference MPM section 28.6)*

Reminder to confirm authenticity of part following each of the following steps.

Sign.

7. Evaluation of Part *(Reference MPM section 28.7)*

7.1 Data being used to evaluate part

☑ Instructions for continued airworthiness

If instructions for airworthiness – record references below:

MANUFACTURES DRAWINGS / PREVIOUS WORK ORDER

☐ Known authentic part

If comparing parts with known authentic parts – record part number and tracking details here:

P/N: Lot No.: PO#: N/A

7.2 Type of Test | In-house or Subcontract

Type of Test	In-house or Subcontract
FIT FORM FUNCTION	IN-HOUSE
INSPECT TO MANUFACTURERS	
DRAWING. D2221	

SRC

EAGLE COPTERS

UNDOCUMENTED PARTS CHECK LIST

7.3.1 Material Test	PO Number	Sign.
WORK ORDER (ATTACHED)	ATTACHED	
		SAR

7.3.2 Material Test Results

PO/WO Number	Confirmed (initial)	
24964 A (ATTACHED)	SAR	
		SAR

		Sign.
8. Fit form and Function	*(Reference MPM section 28.8)*	
8.1 Dimensions		
Undocumented Part	ICA or Known Authentic Part	
TRIAL FITTED ON AS 350 LANDING GEAR AND ALL MOVING PARTS INCLUDING LID + LATCH WERE TESTED AND FOUND TO FUNCTION AS REQUIRED		SAR

8.2 Unique Characteristics		
Characteristics	Confirmed (Initial)	
PART INSPECTED TO MANUFACTURERS DRAWING PRIOR TO BEING FIT TO AS 350 LANDING GEAR. NO FIT ISSUES.	PICTURES ATTACHED	SAR

8.3 Functions		
Function	Confirmed (Initial)	
FIT FUNCTION CARRIED OUT ON LANDING GEAR. NO FIT ISSUES	SAR	SAR

Sign.

8.4 Overhaul Facility Checks

Function/Characteristic	PO/WO Number	
N/A		
		SRC

8.5 Wear Limits

Dimension	Wear Limit	
N/A		
		SRC

Sign.

9. Restoration *(Reference MPM Section 28.9)*

9.1.1 Restoration Required

Details of restoration	In-house or Subcontract	
N/A		
		SRC

9.1.2 Restoration Required

Restoration	PO/WO Number	
N/A		
		SRC

ACA

10. Conformity/Acceptability *(Reference MPM Section 28.10)*

10.1 Airworthiness Directives (if any) that have been completed

_____ ☐ C/W

_____ ☐ C/W

_____ ☐ C/W

_____ ☐ C/W

_____ ☐ C/W

_____ ☐ C/W

_____ ☐ C/W

_____ ☐ C/W

_____ ☐ C/W

(Attach separate sheet if required)

ACA

10.2 Checklist review ☐ Completed

☐ Part conforms to all required characteristics _____

ACA

10.3 Does the part meet the requirements of the type design and/or is it compliant with the OEM's ICA?

☐ Yes ☐ No (if no, discontinue process and send part to Quarantine Stores) _____

11. Certification *(Reference MPM section 28.11)* ACA

11.1 Review checklist to confirm that all criteria for authenticity, acceptability, conformity and restoration have been met. _____

11.2 Issue a maintenance release: The document used for the maintenance release is an Authorized Release Certificate (TC Form One). _____

11.3 Place a copy of the Form One in the Work Order File for the part. _____

11.4 Ensure the certification statement in block 12 of the Form One reads **"The Part has been determined to conform to the approved type design or to be acceptable under section 571.13 of the CARs".** _____

28.4 EXCEPTIONS

28.4.1 Aeronautical products that are not eligible for this procedure are:

- All parts with a life limit assigned to them;
- All parts that have been subjected to abnormal occurrence and as a result is cause for rejection due to the requirements for continued airworthiness;
- All material whose composition, temper, special surface treatment such as shot peening, or other hardness treatment cannot be confirmed;
- All parts that are eligible for use on multiple applications or that have different operational limitations or different limits on time in service;
- All parts for which there are no OEM instructions for continued airworthiness, that is, parts that may have had a life limit but based on the operator's maintenance schedule have been approved for on–condition service;
- All parts for helicopters not listed on the company AMO approval;
- All retractable landing gear parts;
- All piston engine parts;
- All critical parts, as defined in Section 28.1.3 of this manual, for which original equipment manufacturer design data is not available.

28.4.2 Any products that meet the criteria of exceptional products will be tagged as unserviceable and removed to the quarantine stores area awaiting disposal.

28.5 DOCUMENTATION

28.5.1 The checklist for undocumented parts (Appendix H, MPM or Electronic Corridor Version) references the procedure outlined in this manual. This checklist along with any other documentation will be filed with a work order. The checklist will provide the control necessary to certify the product. A new work order will be opened as a minimum every year and a new squawk will be opened for each part to provide a unified format to file documentation. Evidence of all tasks accomplished throughout the course of ascertaining authenticity will be filed in the work order file.

28.5.2 An 'Undocumented Parts Check List' (Appendix H, MPM or Electronic Corridor Version) will be used as a written or electronic verification of the procedural process. The documentation supplied with the part is evaluated for authenticity as it relates to the source of supply. Vendor reputation, OEM indelible inspection stamp, OEM part number, batch number and data plate (if applicable) are examined and compared to known OEM supplied parts of the same part number as available. Removed serviceable part documentation will be examined for aircraft identification, times/cycles of the aircraft and times/cycles of the part.

28.5.3 Parts affected by Airworthiness Directives will be examined either physically or through supplied paper work to ensure compliance with the civil aviation authority requirements applicable to the part.

28.6 PARTS AUTHENTICITY

28.6.1 All parts must be confirmed as authentic before they can be certified. The authenticity of the part is confirmed through the evaluation, fit, form and function, conformity and restoration processes. If, during any of these processes, the part is confirmed as non – authentic it shall be tagged and removed to the quarantine area for disposal.

28.7 EVALUATION

28.7.1 The evaluation of the undocumented part begins with determining which data will be used for the evaluation. Non-critical parts will be evaluated in accordance with the Instructions for Continued Airworthiness supplied through the manufacturer or the regulator. Primary structural parts will be considered critical and will not be allowed through this process. The manufacturers' instructions for continued airworthiness will be used to determine whether the undocumented part is primary structure of the aircraft.

Undocumented parts may also be evaluated against a known authentic part. Known authentic parts will only be considered for comparison purposes if they have come directly from the Original Equipment Manufacturer with OEM certification or if the part is in serviceable as removed condition from an aircraft. Complete documentation of the known authentic part will be recorded on the checklist as part of the records regarding evaluation.

28.7.2 Using the checklist, record the type of data being used to evaluate the part. If the part is being evaluated against a known authentic part, record the part number, lot number etc. of the known authentic part being used in the comparison.

28.7.3 If material testing has been specified, record the purchase order number under which the appropriate testing will be performed. If testing will be performed in-house, record work order, squawk number where details of the test will be recorded. Record the results of the material tests on the checklist.

28.7.4 Material testing that cannot be performed in-house will be contracted to the appropriate laboratory for completion. If the undocumented part fails any of the materials tests, it will be returned to quarantine stores for disposition.

28.7.5 On condition rotable components or time controlled components must have a data plate attached to the part as required and show part number and serial number and must be recorded on the check list.

28.7.6 Bell parts will follow the same evaluation process and detailed in 28.7.1. In some cases Bell parts can be verified by contacting the **'Unauthorized Parts Inquiries Product Assurance'** hot line in Fort Worth, Texas. Details of the part are forwarded to this Bell department. Part numbers, serial numbers, batch numbers may be confirmed as being an original OEM supplied part or having been subjected to Bell's Quality Assurance process and thus meet the requirements of the type design.

28.7.7 If used, details of the Bell "Unauthorized Parts Inquires Product Assurance" need to be recorded on the checklist.

28.8 FIT, FORM AND FUNCTION

28.8.1 The physical size and dimensions must be confirmed by using the applicable data. This may mean comparing the size and dimensions with a known authentic part. Results of this confirmation must be recorded in the checklist.

28.8.2 Other parameters that uniquely characterize the part must be confirmed by using the applicable data. This may mean comparing the parameters of the undocumented part with the parameters of a known authentic part. Results of this confirmation must be recorded in the checklist.

28.8.3 The functions that the undocumented part is to perform must be confirmed using the applicable data. This may mean comparing the functions of the undocumented part with those of a known authentic part. Results of this confirmation must be recorded in the checklist.

28.8.4 If checking the unique characteristics or functions of the part are not within the capabilities of the AMO the part must be sent to an appropriate overhaul facility for characteristic confirmation. This may be accomplished as part of the restoration of the part.

28.8.5 The wear limits of undocumented part must be confirmed using the applicable data. This may mean comparing the wear of the undocumented part with that of a known authentic part. The results of this confirmation must be recorded in the checklist.

28.11 CERTIFICATION AND SUPPORTING DOCUMENTS

28.11.1 Complete certification for the part, if it has been found acceptable must have a Transport Canada Form One Authorized release Certificate. The statement in block 11 of the form will be "**Inspected, Overhauled or Repaired**" as applicable. Block 12 will state, "**This part has been determined to conform to the approved type design or to be acceptable under section 571.13 of the CARs.**"

28.11.2 Supporting documents including the checklist, calibration records, test results must be complete and filed with the work order. Ensure that the certification documents accompany the part.

28.12 REJECT

28.12.1 Removed rejected parts from the work area into quarantine stores for disposition. Include unserviceable tags indicating reason for unserviceability. Section 15 of the MPM and CPM deal with specific details regarding quarantine stores, unserviceable parts and their disposition.

28.13 CERTIFICATION AUTHORITY

28.13.1 Certification authority for undocumented parts will be controlled through Section 21 of this manual. Individuals holding ACA and SCA authority will be eligible to make certification statements for undocumented parts within the scope of their approval and provided they have received training in the requirements of the Canadian Aviation Regulations, Standards, Eagle Copters Maintenance policies and procedures with regard to undocumented parts certification.

28.13.2 Certification by ACA/SCA on the checklist is only required in section 10 & 11. All other sections on the checklist may be performed by a non-certification authority as it is considered as a work process.

28.14 COUNTERFEIT PARTS

28.14.1 Any parts that are suspect or confirmed to be counterfeit will be reported to Transport Canada using the Service Difficulty Reporting system as outlined in Section 24 of this manual.

28.15 INVENTORY

28.15.1 Once certified the part will be received into inventory in accordance with Section 15 of this manual. The part will be appropriately binned until such time it is requisitioned for either a work order or a sales order.

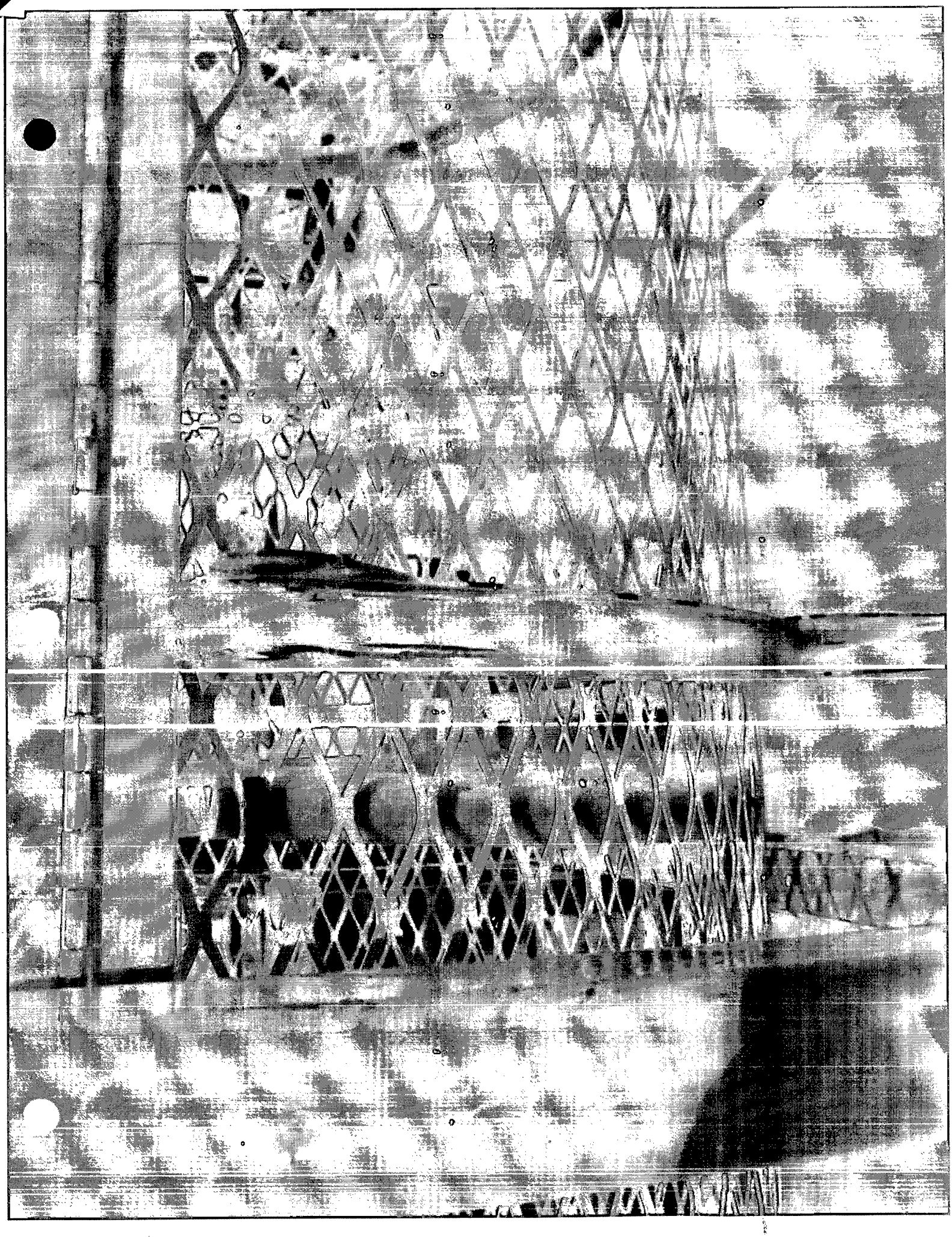

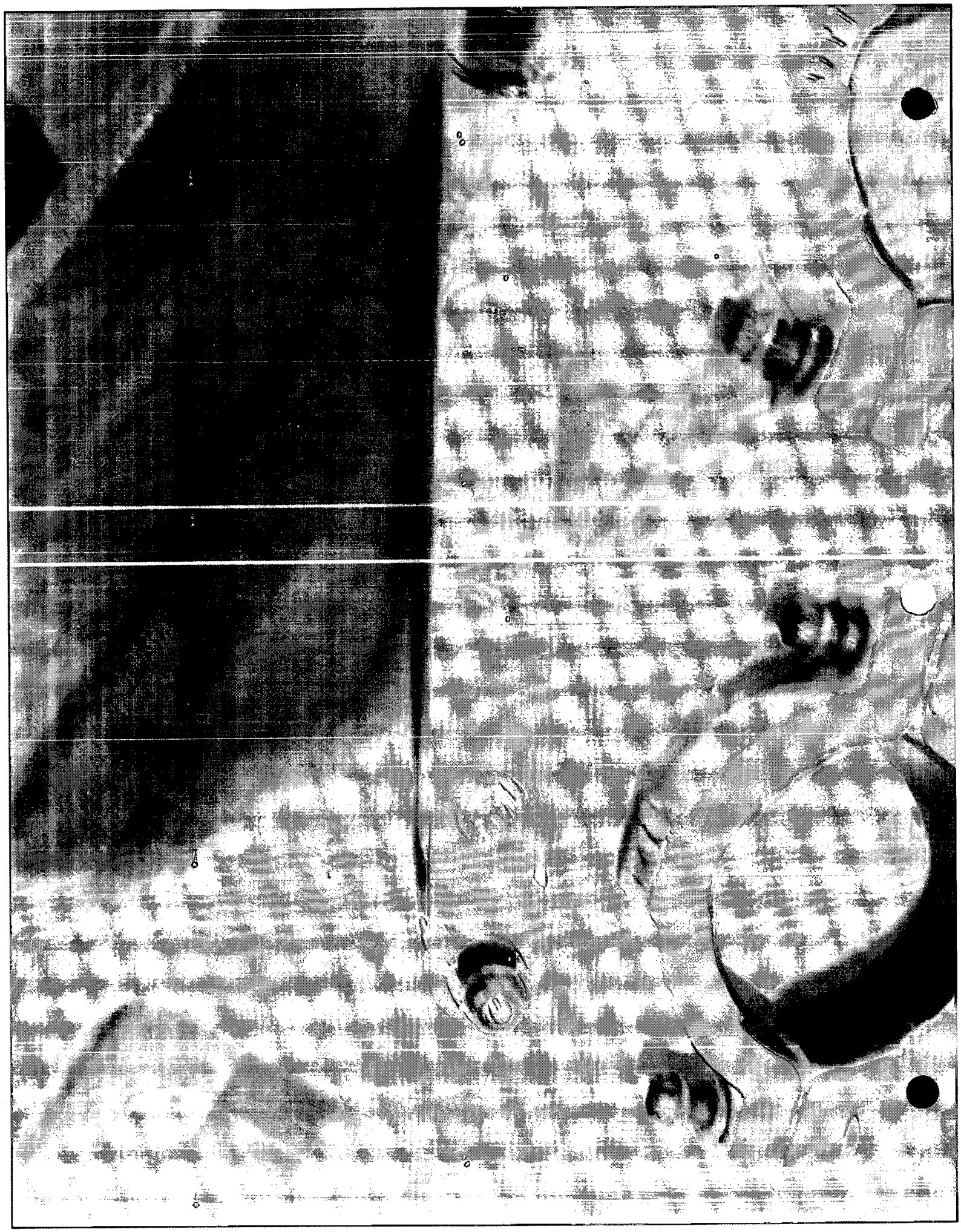

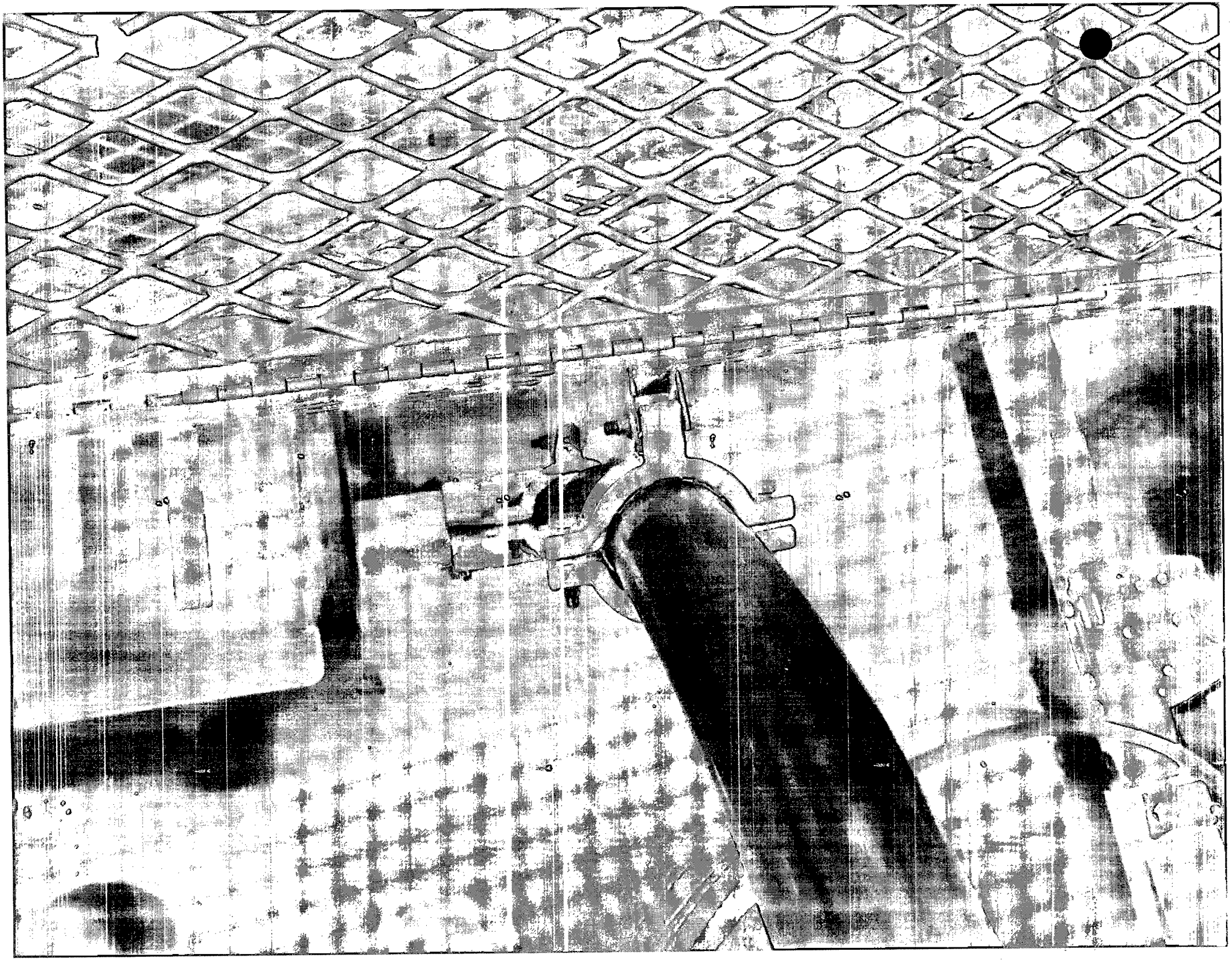

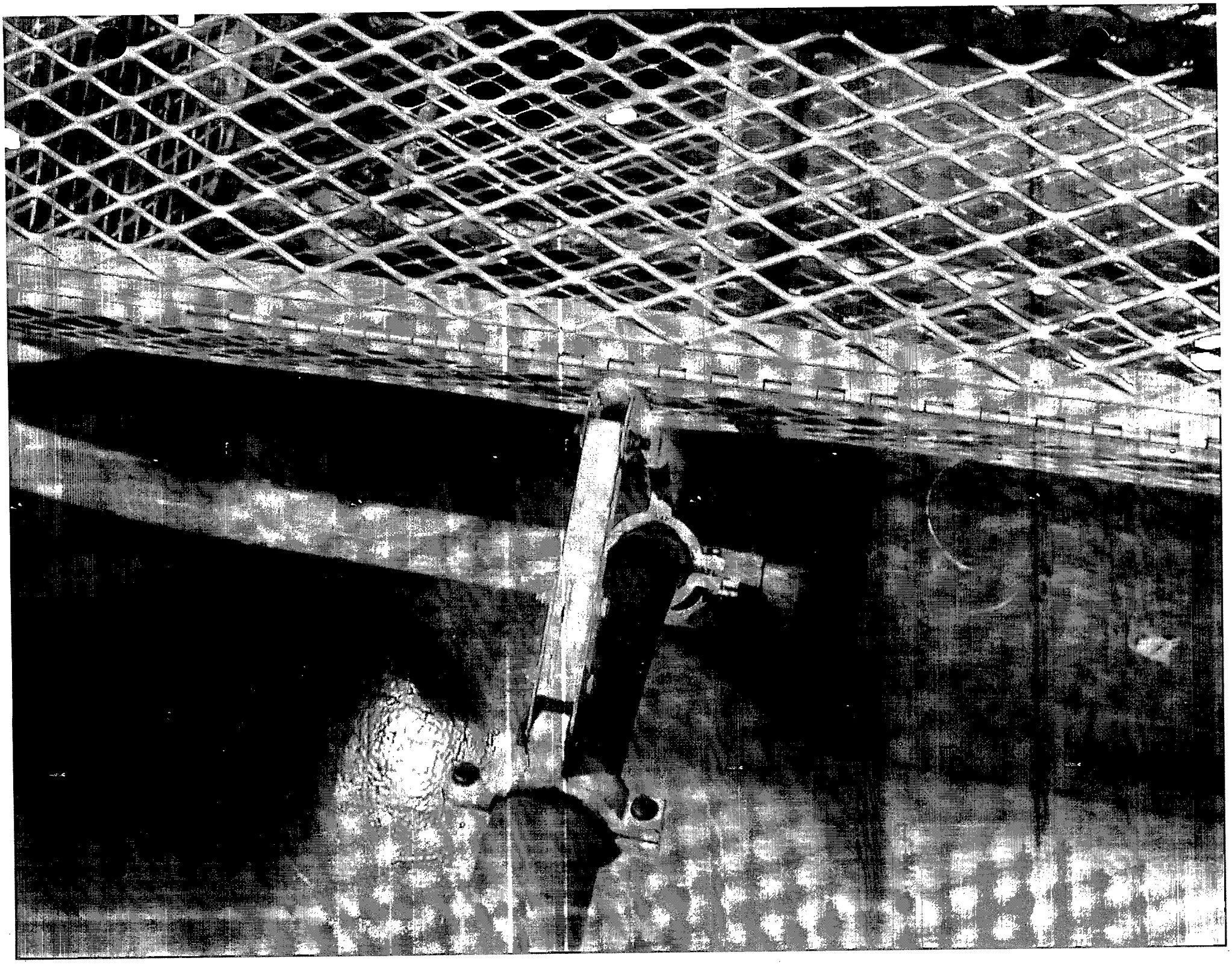

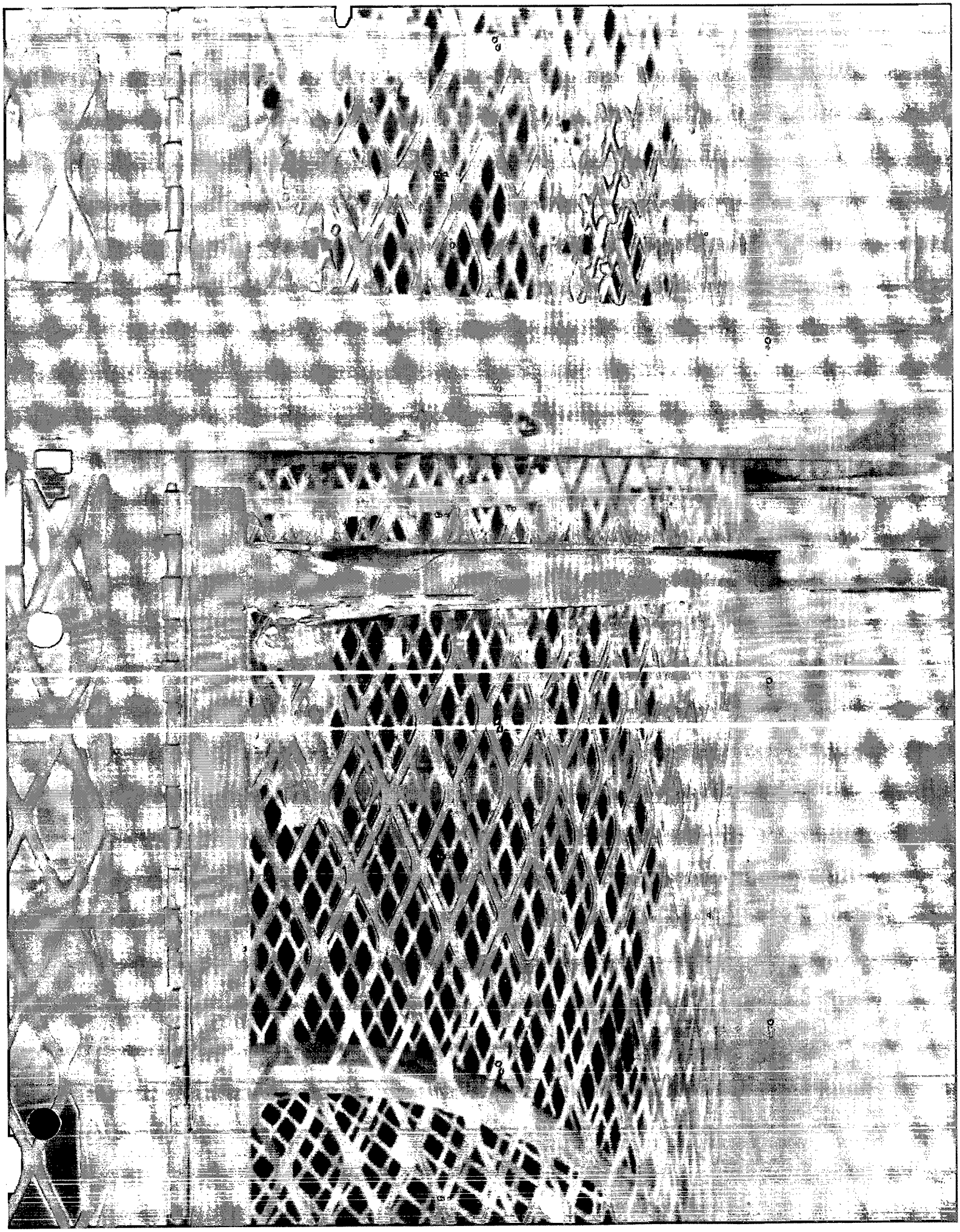

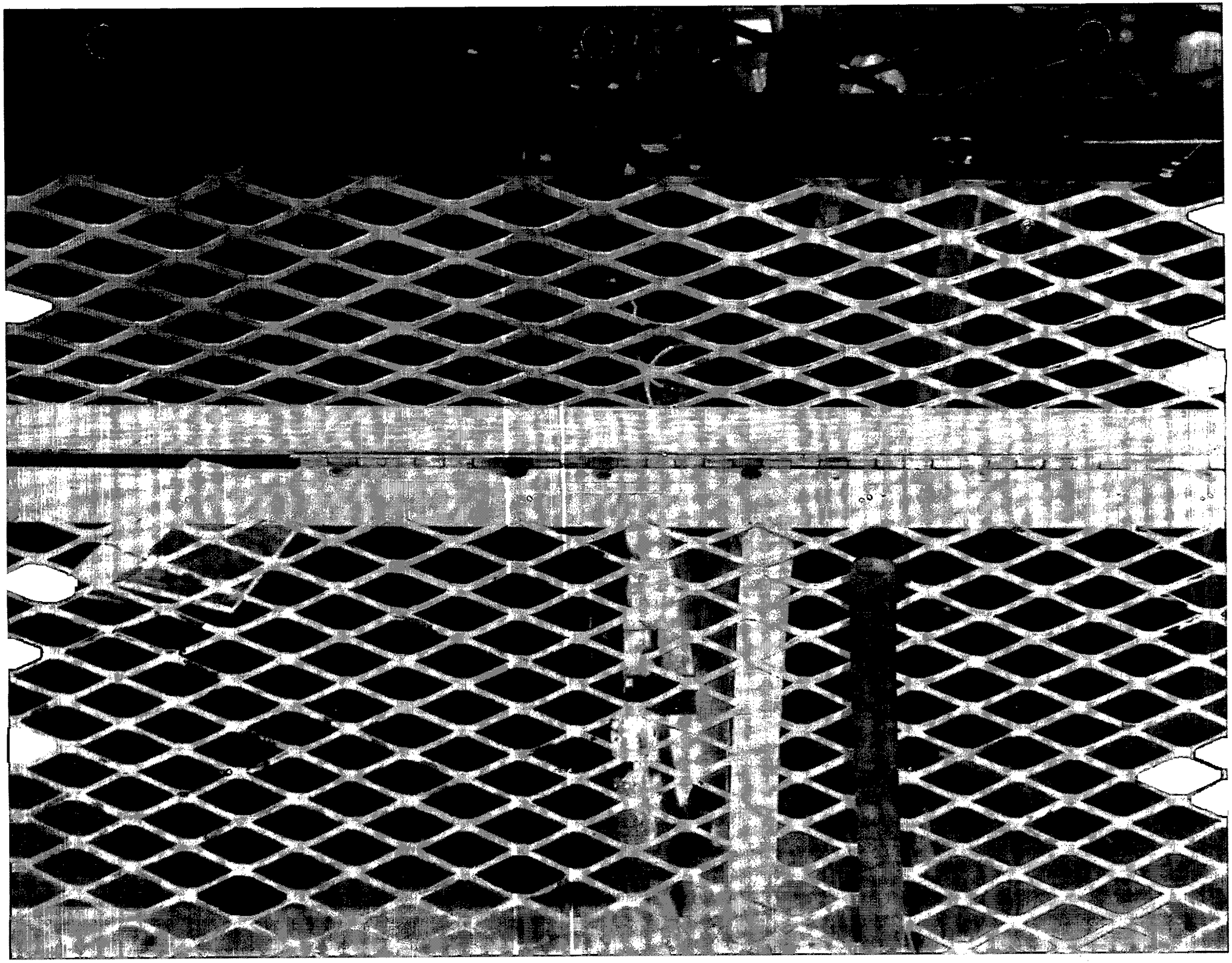

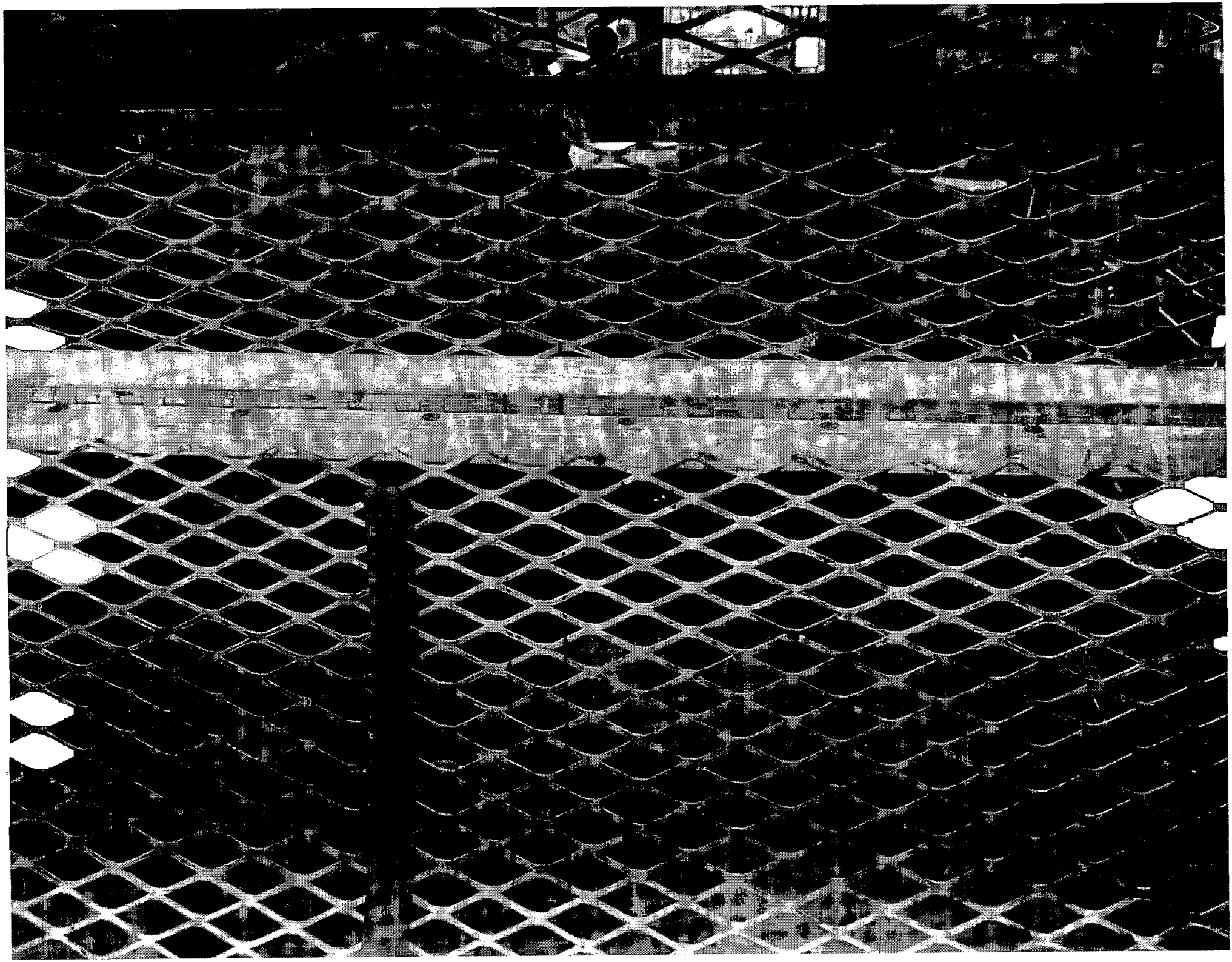

MAXIMUM DISTRIBUTED LOAD
200 lb / 91 kg

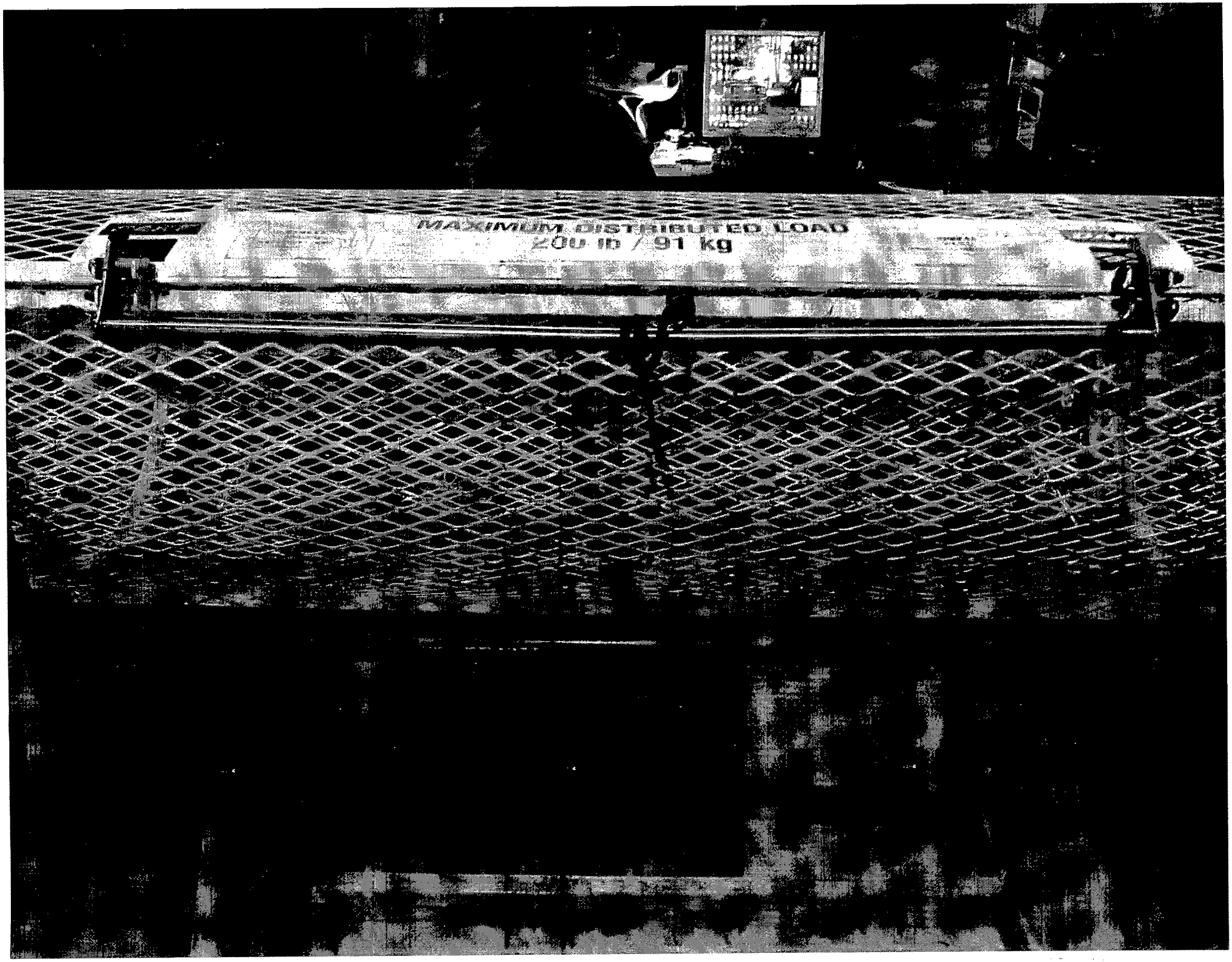
MAXIMUM DISTRIBUTED LOAD
200 lb / 91 kg

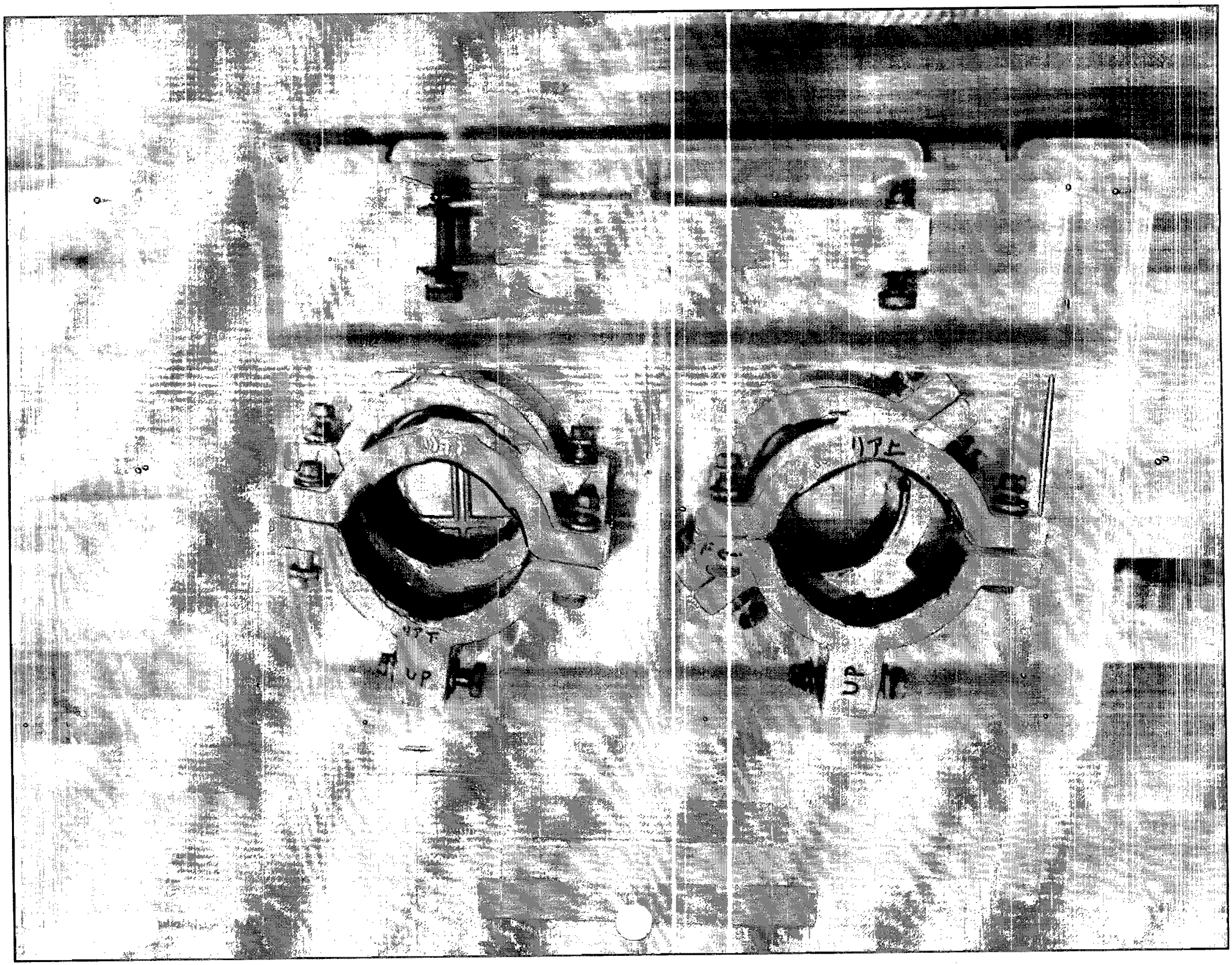
UP
UP